NutriDose II *i*

Operator Manual

Computerized
Nutrient Management Controller

- **Fertigation by in-line injection**
- **Expandable – up to 30 zone**
- **Smart irrigation triggering (Solar integrator PLUS)**
- **Two different nutrient mixes selectable**
- **Data logging**
- **Remote operation**
- **Nutrient (Root Zone) Heating/Cooling**

CONTENTS

1	Overview	2
2	System layout suggestions	4
3	General set-up for all users	8
	3A Configuration	8
	3B Zone Set-up	11
	3C Time set-up	13
4	Quick set-up for EC plus pH feedback systems	15
5	Settings	16
6	Menu System	18
7	Installation	26
	7.1 General installation instructions	26
	7.2 Connection diagram	28
	7.3 Selector switch setting	37
	7.4 CompuGrow software installation	39
	7.5 Sensor calibration	41
8	Maintenance	42
9	Fault finding	43
10	Warranty	43

Autogrow Systems Ltd., 5 Douglas Alexander Pde,
North Harbour Industrial Estate, Auckland 1330, New Zealand
Ph +64 9 4152380

1 Overview

The Nutridose II *i* is a computerized, feature packed, in-line fertigation controller for up to 30 irrigation zones. Each of the 30 zones can have its own solar integrator, which may be modified for temperature, relative humidity and, in the case of outside zones, wind and rain.
For straight fertigation, the controller doses A and B Nutrients and pH corrector using a closed loop, feedback method. When used in this way it can be programmed to select the nutrient mix from one of two sets of stock tanks. This allows different zones to receive a different mix or even the same zone can be given a different nutrient mix day and night. Alternatively, the controller will dose up to four nutrients and/or additives on a volumetric, timed or bulk basis.

The injection into the line is by proportional (0..10V), pulse proportional (PWM), stroke frequency or simple on/off means. This allows the injection to be performed by variable speed dosing pumps, proportional valves, venturi/solenoid (pwm), stroke frequency pumps or a simple on/off pump. Each of these methods has cost, benefit and accuracy implications and the desired method should be carefully considered. Autogrow will be pleased to discuss these requirements for specific applications and can provide all ancillary equipment if required.

The controller can be configured for either direct in-line injection or for turbulent mixing tank operation. When used with a mixing tank, the controller has additional functionality to ensure that the mixing tank is pre-filled and dosed BEFORE irrigation commences. This gives high accuracy from the very start of the irrigation cycle.

The controller may be connected to a PC computer for setting, data logging and alarms. The PC provides a very user-friendly interface although it is possible to set and use the controller completely stand-alone. The PC interface also provides remote alarms and data/event logging. The PC interface is highly recommended as it provides much more information to the grower and also a much simpler interface. The same software, interface and cable can also be used to connect to other Autogrow control and monitoring devices.

Input modules:-

The inputs used will depend on the type of operation required. For instance, if some zones are out in the open then an external weather-station is required. If some irrigation zones are inside a greenhouse then an internal environment sensor system is needed. If an environment controller such as the AutoVent 2 is installed then the NutriDose II can get all of its information regarding both inside and outside conditions from the controller and no additional sensors are required.

Outputs:-

4 dosing outputs by proportional (0..10V) or three outputs by pulse proportional (PWM), stroke frequency or on/off. Note: proportional and pulse proportional outputs may be mixed but there remains a maximum of four outputs in total. The pulse proportional method works as follows:- Within a fixed cycle time (eg 8 seconds) the injection is on for part of the time and off for the remainder of the cycle time. For example, for a low EC, the injector might be on for say 2 seconds and then off for 6. For a higher EC, the injectors might be on for 6 seconds and off for 2. For good mixing this type of injection should be done before the main irrigation pump and

an additional mixer such as the Autogrow “micro mixer” may be used between the injection points. If a turbulent mixing tank is used then additional mixing is unnecessary.

Other outputs:-
Irrigation Pump – on/off
Stir
Fill (only used for mixing tank setup)
Select A & B nutrients from mix 2 tanks (default is mix 1)
Alarm – contact closure AND internal buzzer
Nutrient (grow bed) temperature output (either heater or cooler)
Mister output (on/off) (solar integrator and temperature set points) OR filter flush output
Mister pulse output.

Irrigation station outputs: 10, 20 or 30 outputs (expandable in units of 10 up to 30)
Each station to have a choice of set points as follows:
Closed loop mode
- A and B dedicated outputs
- pH dedicated output uses global raise/lower

Output B may be varied relative to output A (except in ON/OFF mode). This can be used to equalize dosing rates or to change the ratio to suit different crop conditions.

Irrigation triggering

Irrigation triggering of the NutriDose IIi is extremely flexible. During the day it is normally done by solar integration. The reason for this is that the plants demand for water is very closely matched to the amount and duration of light energy received in the photosynthetic radiation band.
With the Nutridose IIi all zones can be triggered by a single setting or each zone can have a different solar trigger setting. The later method allows different plant species to be irrigated by a single controller.
In addition, the solar integration process may be modified to take into account temperature, humidity and for outside zones wind speed and rainfall. What this means is that it is possible to set up the solar integrator so that it runs a little faster when it is very hot and/or very dry and runs a little slower when cool and/or humid. For outside zones wind will have a drying effect and so it is possible to speed up the solar integration process when it is very windy. Outside zone integration counters may be reset by rainfall of a user set level.

The trigger may be by a combination of “time-of-day” programmed irrigations and solar integrated triggers. The programmed irrigations are normally used for evening and early morning irrigations and then the system is switched over to use the solar integrator triggering for the day-light hours. Some growers schedule two programmed irrigations to occur one soon after the other, just before switching to the solar triggering. This ensures that all pots, bags or slabs start the day fully saturated and flushed. Note that the programmed irrigations apply to all irrigation zones (one after the other) whereas each irrigation zone can have a different solar integrator trigger. Note also, that each irrigation zone can be set to receive either mix1, mix2 or water only for each programmed irrigation as well as for the solar triggered time period.

2. System Layout suggestions

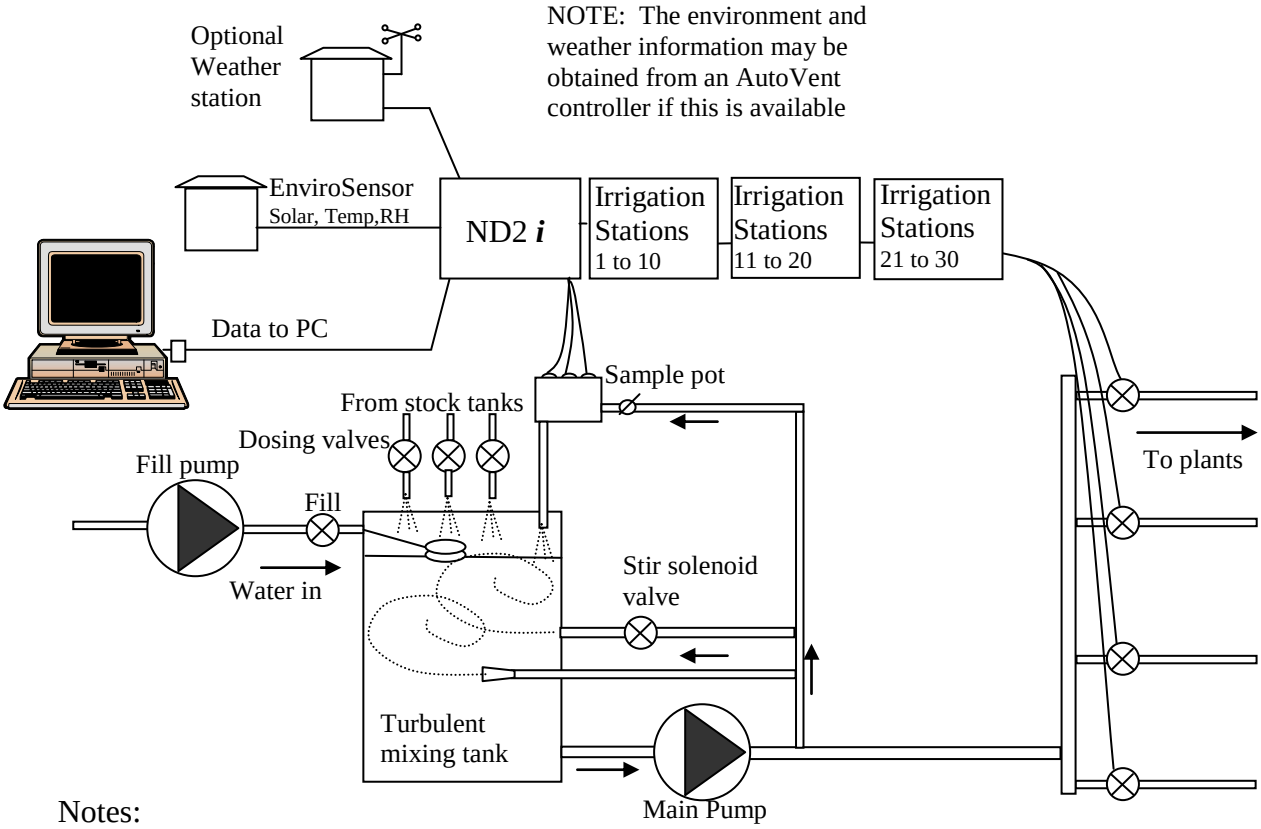

Notes:

1. The injection control valves may be proportional or pulse proportional valves (PWM)
2. The injection of the nutrients and acid may be by venturis in the stir return pipe from the main irrigation pump
3. Two different fertiliser mixes may selected for each zone, solenoid valves select which tank is required (any combination)
4. The main pump must be able to withstand dilute fertiliser and pH chemicals
5. A special proportional valve is required at the inlet to the tank
6. The mixing tank can be quite small eg 200Ltrs even for quite high flow rates
7. The fill pump should be able to deliver at least as much water as the irrigation pump although it will be working into a lower pressure.
8. When the main pump is used to also circulate the water in the tank (as shown above) then dip switch 1 should be in the ON position
9. The tank should be fitted with both low and high water level switches. These should be shrouded to avoid false operation due to turbulence. The low level switch should be wired in series with the irrigation pump contactor coil and the high level switch should be wired back to the ND2i. The low level switch should open for low level and the high level switch should close for low level.

Features:-

This system provides a very low cost method of in-line injection for the following reasons.

1) Only low pressure sensors are required
2) Excellent mixing in the turbulent tank
3) Simple low pressure dosing valves or pumps can be used

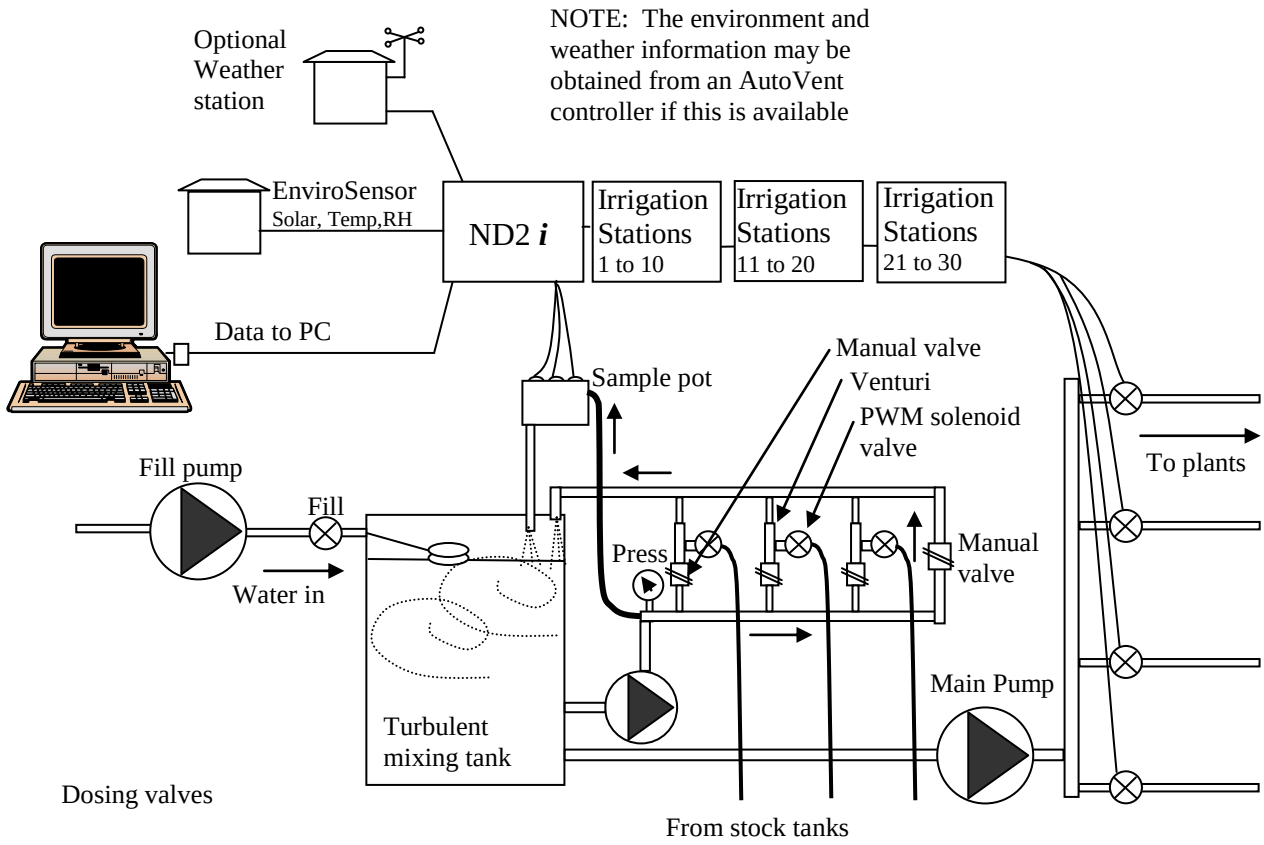

Notes:

1. The injection control valves may be proportional or pulse proportional valves (PWM)
2. Two different fertiliser mixes may selected for each zone, solenoid valves select which tank is required (any combination)
3. The main pump must be able to withstand dilute fertiliser and pH chemicals
4. A special proportional valve is required at the inlet to the tank
5. The mixing tank can be quite small eg 200Ltrs even for quite high flow rates
6. The fill pump should be able to deliver at least as much water as the irrigation pump although it will be working into a lower pressure.
7. When a dedicated pump is used to circulate the water in the tank (as shown above) it should be controlled by the stir output and dip switch 1 should be in the OFF position

Features:-

This system provides a very low cost method of in-line injection for the following reasons.

1) Only low pressure sensors are required
2) Excellent mixing in the turbulent tank

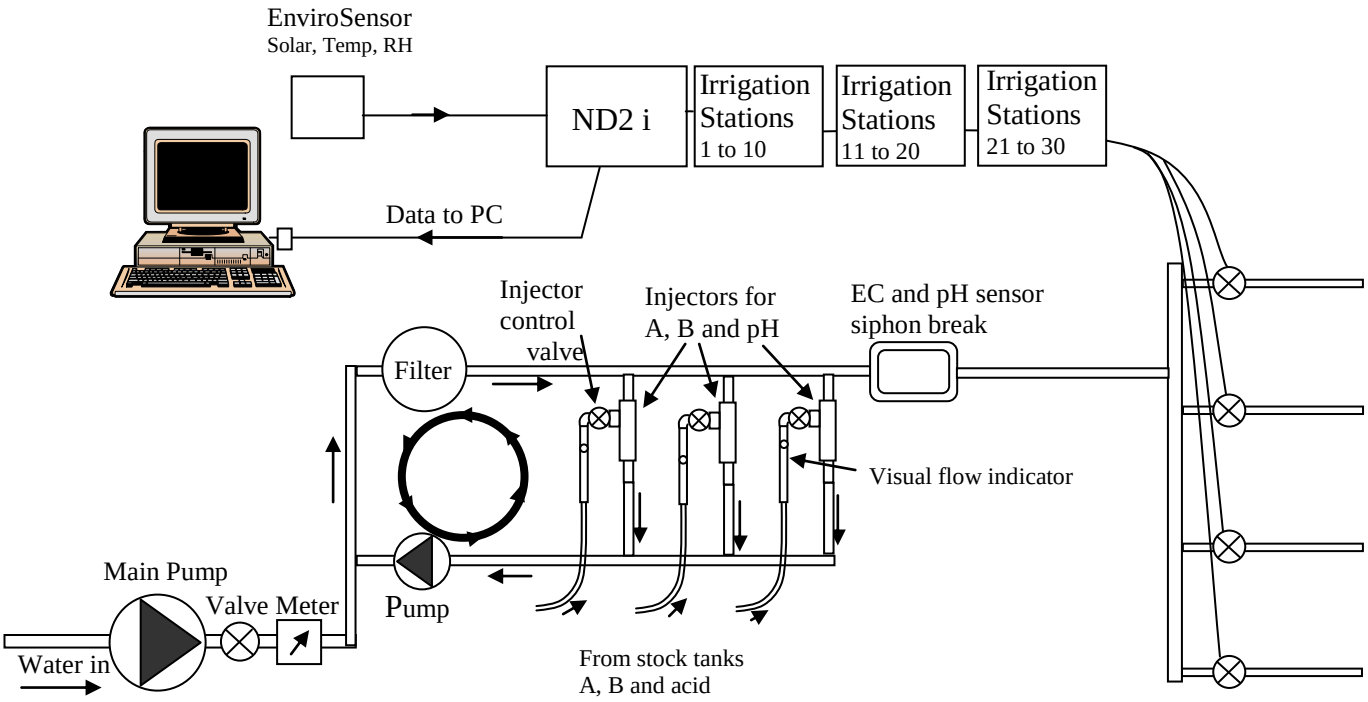

Cyclic In-Line Mixing System

This example injects the nutrient directly into the line using pulsed solenoid valves. The recycling of the water through the injection system, auxiliary pump and filter helps ensure the injected nutrient is well mixed with the incoming water. Water and fertiliser flow meters may be added into each line.
Selection between the two sets of stock tanks is not shown in these diagrams.

Notes:

1) The injection control valves may be proportional or pulse proportional valves
2) Two different fertiliser mixes may selected for each zone, solenoid valves select which tank is required (any combination)
3) The aux. pump must be able to withstand fertiliser and pH chemicals
4) The aux pump should be connected to the “stir” output of the ND2i
5) Dip switch 1 should be in the off position
6) Two single pole relays (24V AC) are required to select between the two sets of A and B tanks. See circuit diagram

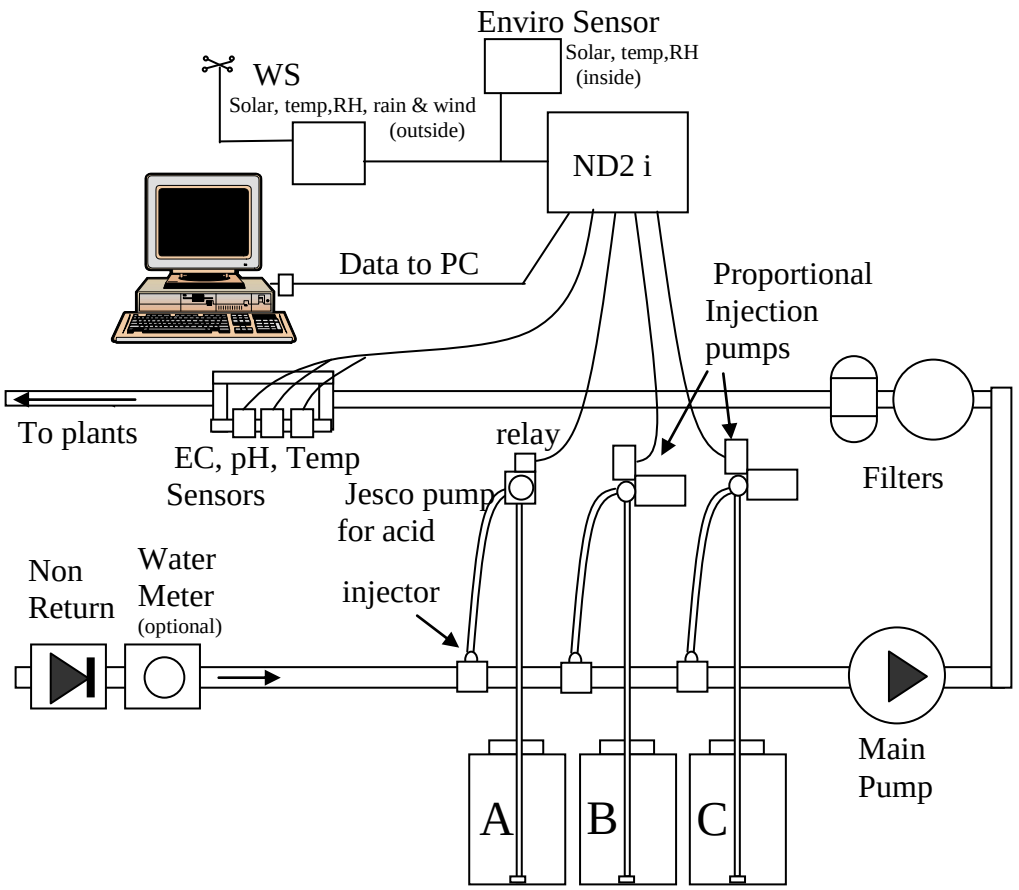

Typical installation using proportional pumps for nutrient dosing and a stroke pump for acid dosing

Notes:

The main pump may be placed before or after the injection points. If placed after the injection it provides better mixing but must be chemically resistant to the weak nutrient mix. If placed before the injection points then a mixer may be used to ensure thorough mixing of the injected fluids. Autogrow make a low cost twisted-vortex mixer which is suitable for this application.

Two sets of A and B tanks may be used as shown in the previous application

3 General set-up for all users

A - CONFIGURATION

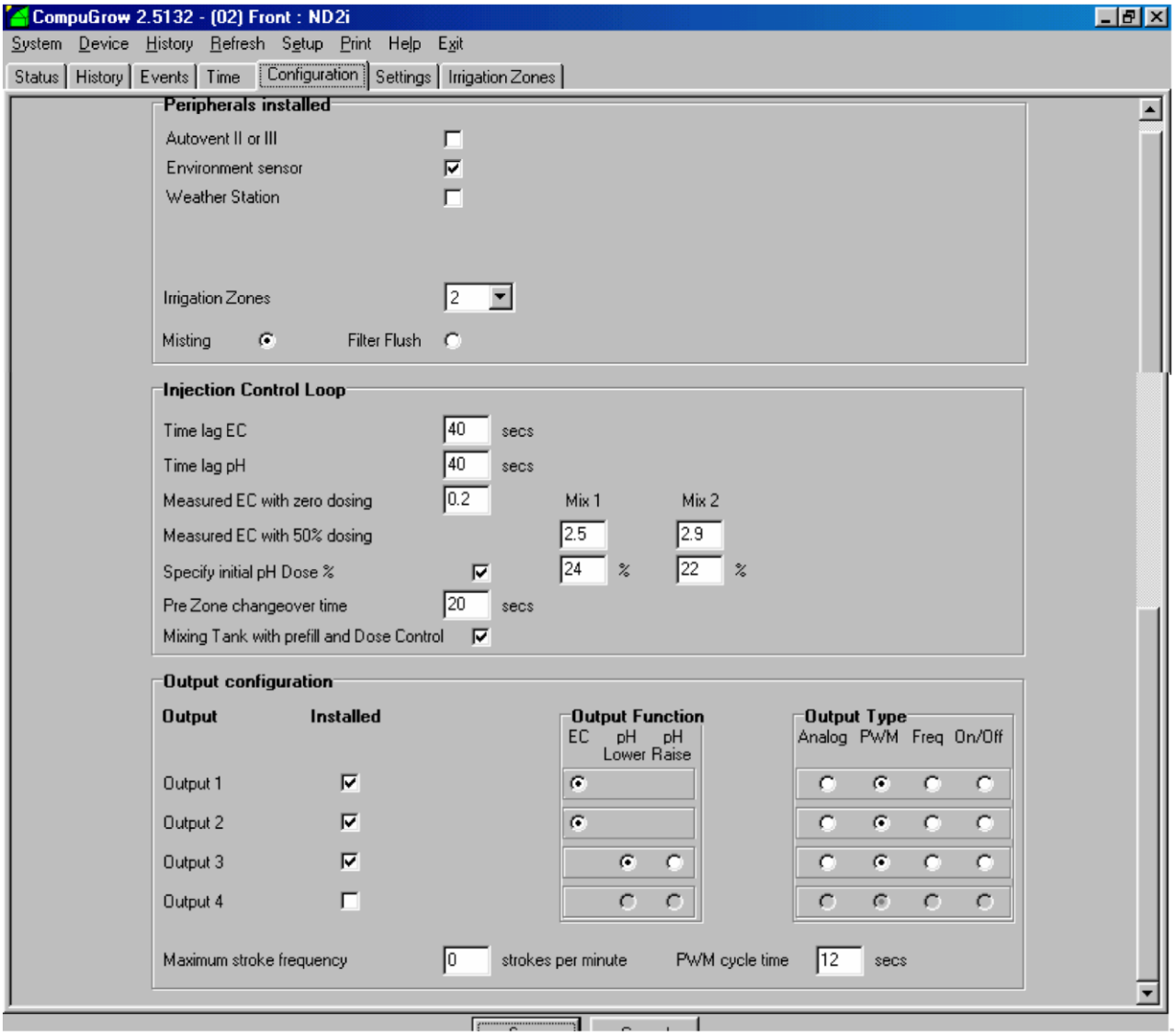

All users have to configure the system. This procedure tells the controller what peripherals are attached and in some cases their characteristics. The following description follows the order that these settings are found in the PC configuration and settings tabs. Similar settings will be found within the controller menu system.

1) **Peripherals installed.**
   You must specify which peripheral modules are connected. These tell the controller where it will get its environment information from. For example, it can come from an AutoVent controller an inside environment sensor and may also have a weather station. In addition you must specify the number of irrigation zones or stations that will be used whether misting or filter flushing will be required
2) **Mode of Operation.**
   Here you can select if you want each zone to be independently triggered (during the solar integrator time period) or whether you require all zones to be irrigated

from a single trigger. If all are to be irrigated off one trigger then you also need to specify if the irrigation zones are all inside or all outside.

3) **Output Configuration**
Leave the injection loop control section for the time being and set up the output configuration. Here you need to check boxes to tell the controller if you have installed an injector for each of the outputs and then what the function of the output will be and the type of output device that you are using. Remember that besides selecting the output type you also need to connect the analogue outputs to a different connector to the other output types. Also, notice that certain outputs are restricted to particular functions for example if output 1 is selected for EC injection then output 2 will automatically be allocated to EC as well.
If frequency control is selected then you will need to also set the maximum strokes per minute that the pump will accept. For PWM setting you need to set the PWM cycle time – normally 10 seconds gives good results.

4) **Injection control loop**
This group of settings is only required if you intend dosing EC and/or pH by using the feedback method in which the EC and pH is measured and this is used to control the injection by "analogue" or "pulse proportional" (PWM) methods to eliminate any error. Two of the settings are to do with the time lag that occurs between a change in injection and a response from the sensor.

For a mixing tank system
Calculate the average time taken for water to move through the tank. At 200LPM and a 100L tank this will be 30 seconds. Use this as the initial setting for the lag setting for EC. If it is set too short, the system will tend to overshoot and will not settle on the correct value. If this is the case, increase the lag time. Set the pH lag to be about 5 or ten seconds longer than the EC lag as pH electrodes need more time to respond..

For an in-line injection system
The easiest way to determine the lag times is by triggering an irrigation and then measuring the total quantity of water used in say 5 minutes. By dividing by the number of minutes this gives the flow rate per minute. Then measure the distance between the injection point and the measuring point (in metres) and use the formula and table below to calculate the expected time lag . See example calculation. In addition to the calculated lag you must add the response time for the sensors.

Pipe diameter	Lag Time seconds per metre (at 1 ltr/sec of flow)
25mm	**0.5**
32mm	**0.8**
40mm	**1.3**
50mm	**2**
65mm	**3.3**
80mm	**5**

Example:-

An installation using 40mm pipe uses 450Ltrs in 5 minutes. The distance between the injection point and the sensor is 4.5m.

Flow rate (F) = 450/(5 * 60) = 1.5 Ltr per second

Lag = 1.3 * D / F = 1.3 * 4.5 / 1.5 = 4 seconds

To this we must add the response time of the sensor which is about xx seconds for the EC probe and xx seconds for the pH electrode

So, for the EC loop we need to enter 4 + 5 = 9 seconds
And for the pH loop we need to enter 4 + 8 = 12 seconds

Initial settings
The remaining setting within the "Injection Control Loop" group must be set after taking readings of EC with the EC and pH injection firstly disabled and secondly with EC dosing fixed at 50%. Of course, this must be done with the stock solutions at their normal concentrations and must be repeated using for mix 2 if a second mix is to be used. This can only be done from the controller menu selection and not from the PC. Selecting to run with 50% injection can only be done from the controller front panel and not from the PC. The 50% setting provide the controller with the correct (or nearly correct) starting point. If the EC value is not accurate or takes a long time to stabilize then this setting is probably incorrect. The controller can only vary the dosing rate from the dose rate predicted from these entries by a limited amount. Finally, set the starting dose rate for the pH. This should be adjusted by trial and error once the EC has been set and is stabilized.

Settings
General settings
If you provide an EC range for sunny and cloudy conditions then you will need to set a maximum rate of change of EC which can occur as the conditions change. A typical value might be between 0.2mS/cm per hour to 1mS/cm per hour. This will allow the EC to move slowly down in sunny weather and slowly up in cloudy weather. Of course the EC can never become less than the "sunny" setting or more than the "cloudy" setting.
The pH mode for all zones must be set here to either lower (acid) or raise (alkali) **and this must correspond with the actual solution connected**.
Also within this group is a setting that allows any difference between the A and B injection rates to be corrected. Initially set this to 100% and if you notice that the A stock solution is used at a faster rate than the B, increase the B by changing it to 105% or more. If the A is used at a slower rate then change it to a value below 100%. (This setting does not apply to ON/OFF control)

Solar Integration. Here you can specify whether you want to have the integration rate for the solar integrator modified to take into account other environmental factors such as temperature and humidity. If crops are grown outside then you can also introduce the effect of wind and rain. The weightings are determined empirically and will require considerable "trial and error" to set them exactly. Remember that a weighting of zero means that it will have no effect, 5 will have an average effect and 10 will give it its maximum effect. Each individual weighting has a maximum possible effect of reducing the integration rate to 50% or increasing it to 200%. These effects are additive.
With all effects turned off, the solar integrator counts in units of mols**.** As a rough guide, on a clear day in mid summer the maximum count could reach about 50 mols

in one day.

The rain override simply restarts the counter from zero if the specified amount of rain is collected within the set period.

B ZONE SETUP

In this group each irrigation zone or station must be set as follows:-

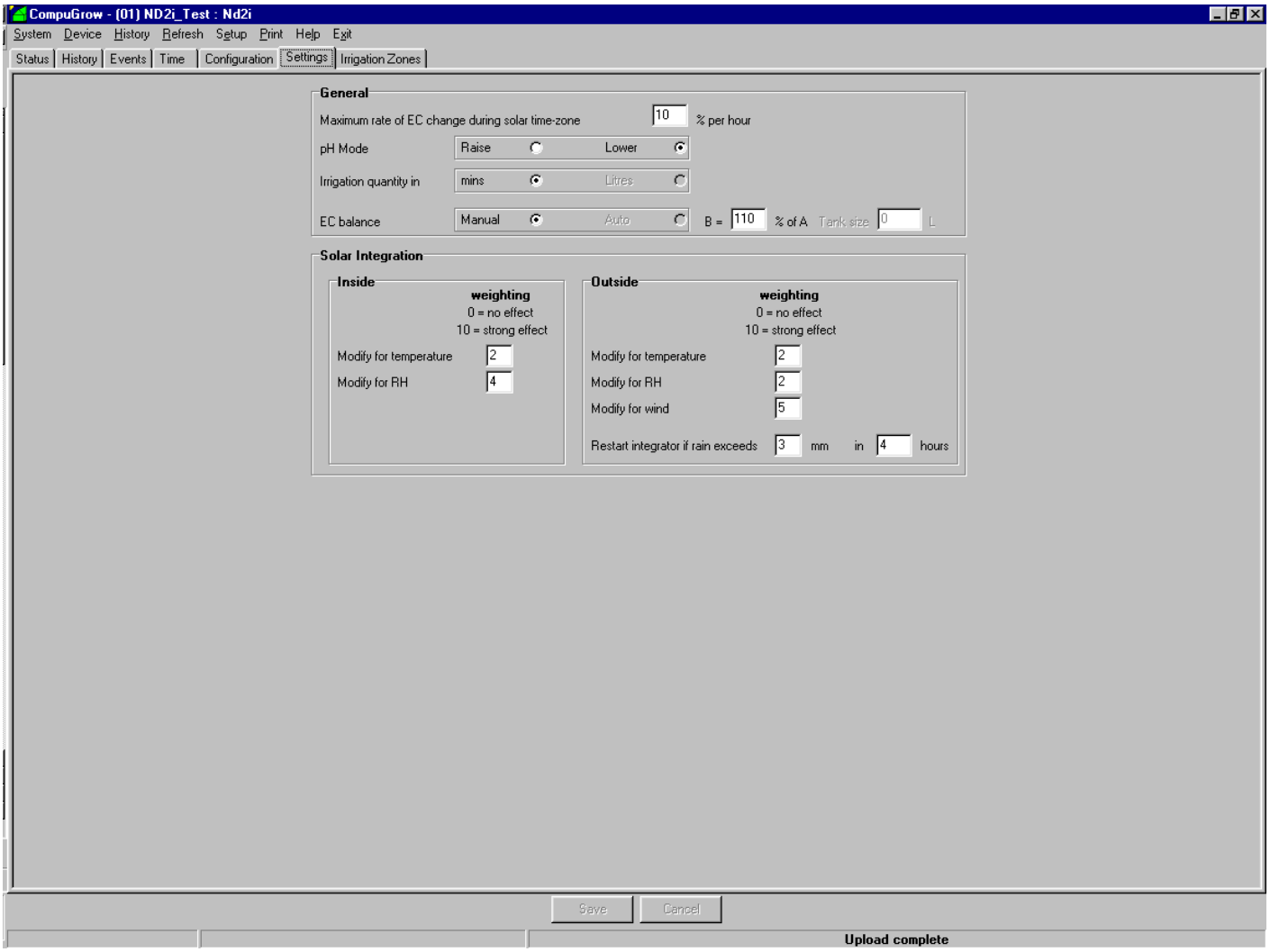

1) Check *Irrigation enabled* to allow irrigation or uncheck to stop this zone from irrigating
2) Check *injection enabled* to allow fertigation to take place or uncheck to irrigate with plain water
3) Specify *Irrigation Quantity* for this zone
4) Specify the *trigger count* ie the solar integrator value at which you want an irrigation to occur
5) The *Integrator Count* value shows you the current value in the counter. You can overwrite this value if you wish. When this count reaches the trigger count an irrigation will be triggered
6) The injection *output setpoints* must now be entered. The format that these will take depends on the output functions specified in the configuration tab. For

example if outputs 1 and 2 have been allocated to EC injection then you will need to enter these in the Zone Advanced screen. To get to this pop-up screen, click on the button at the start of the row for that zone. If an output is allocated to pH lower, you will be asked for the pH lower setpoint. Note that if an output has been allocated to pH raise and another to pH lower then you will be prompted for a pH lower set-point and a pH lower set-point. These however, must be the identical.

7) Finally, you need to specify the extended set-up values for each zone. To activate the extension screen, click on the zone name button at the beginning of each row.
– Check if *zone is outside*
– Select from *mix 1, mix 2 or water only* for *the solar time zone and also the required EC for mix 1 and mix 2 for each of the programmed irrigations.*
– Check if *this zone is a Tee tape drain zone* (see below)
– Specify which *zone is Tee tape drain for this zone* (if there is one)
– Check if this *zone valve is to open during Tee drain time*
- A zone nominated as a T drain zone will have all of its setting boxes grayed out except for the quantity (which must be specified in minutes)
- The flow rate scale factor is normally set to 100%. However if you have some zones that require a lower irrigation flow rate then this factor can be entered here. This will result in more accurate initial injection rates.

8) Remember to save all settings before leaving the current tab

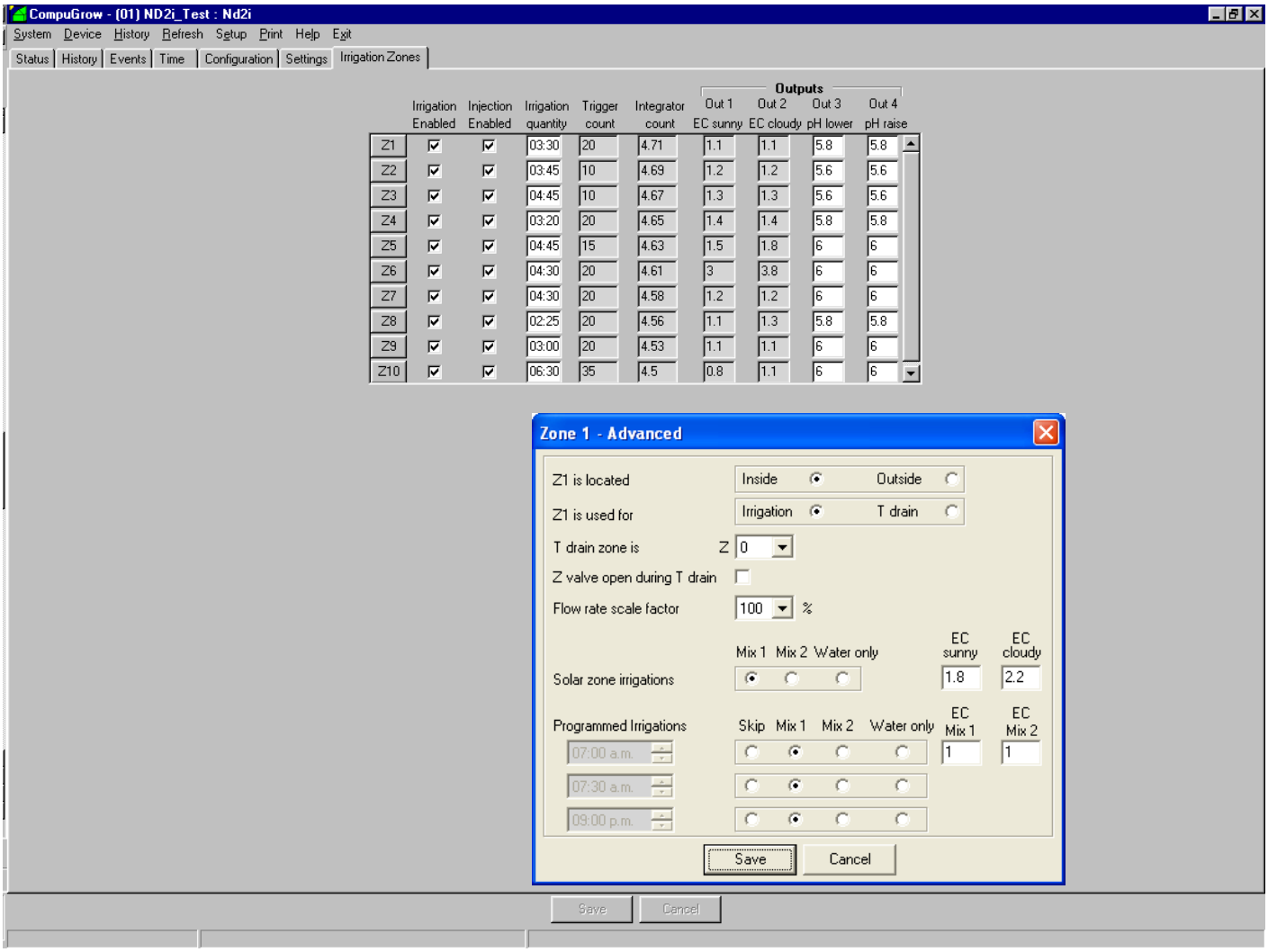

Tee Drain function explained
When drip tape (Tee tape) is used over a row of boxes or pots, the row normally is positioned on a slope so that any run-off will run to one end for collection. This also means that the drip tape will lie on a slope with one end higher than the other. When an irrigation is complete and the irrigation zone vale closes, the drip tape is left full of water. This remaining water will tend to run down to the lowest end of the tape which will continue to drip for some while after the upper end has stopped. If this is allowed to happen then the boxes at the lower end will end up much wetter than those at the top and will tend to suffer from disease problems. To help prevent this the zone can be drained by opening a valve connected to its lower end. This is achieved by allocating one of the other zones as its T drain zone. In addition the zone nominated as T drain zone must also be configured as such. The drain water from the tapes can be collected and channeled to irrigate some outside plantings to avoid wasting it. Usually each drip tape zone has its own drain valve but the ND2i provides a lot of flexibility in this regard

C TIME SET-UP

In the time tab you need to check that the controller clock is the same as that of the PC. If not first make sure that the PC clock is correct and then click to make the controller the same as the PC.

Also in this tab you must specify the Solar time period during which you want irrigations to be triggered by solar integration. During the solar time zone, each zone can have it’s own trigger point so that some zones will be watered more often than others. Alternatively, you can set the system so that all zones are watered in response to every trigger.

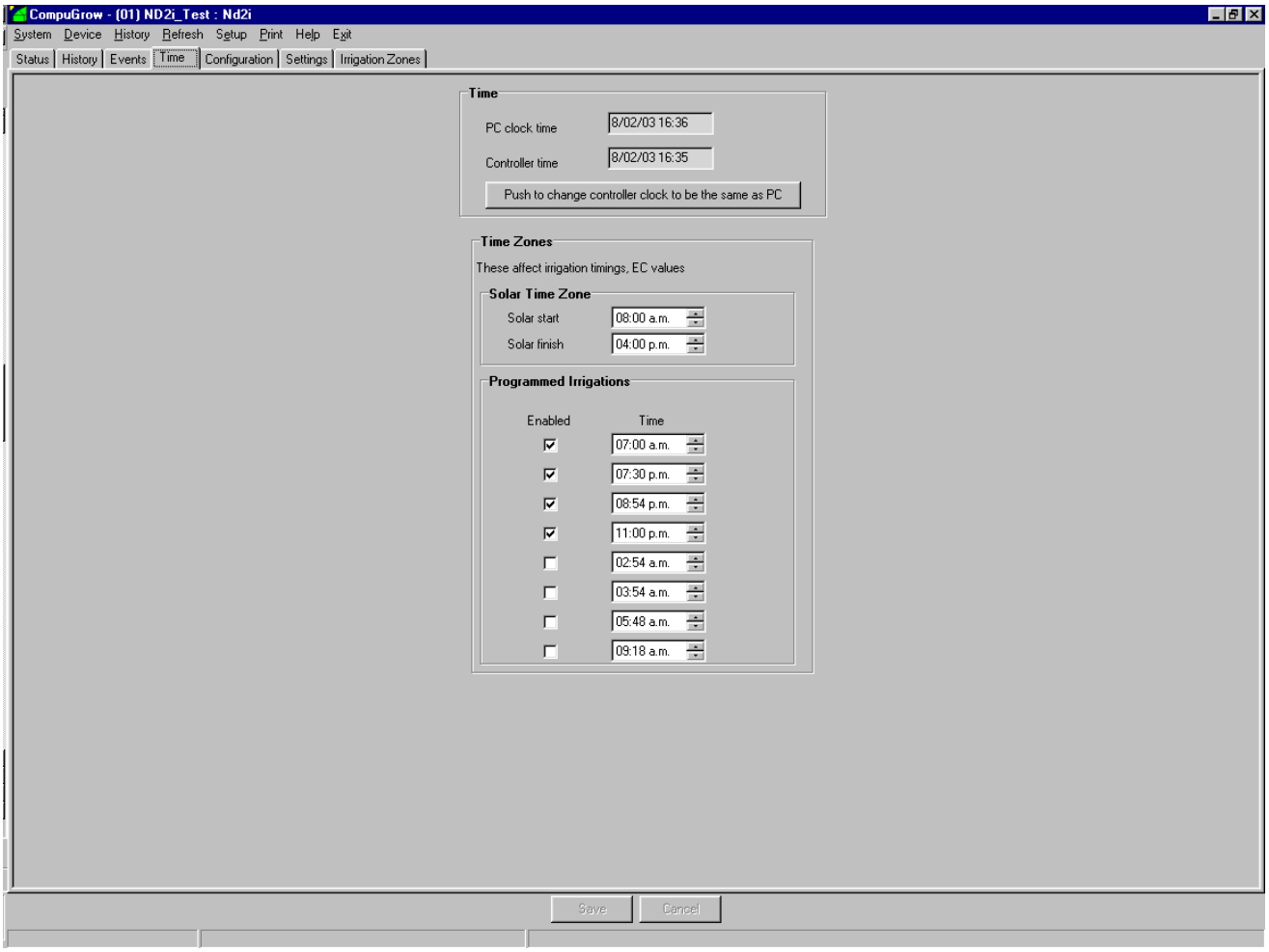

Finally set any programmed irrigations that you require. In the "*irrigations zone*" tab, each zone can be set to either skip any particular irrigation, to use mix 1, mix 2 or water only. Remember that all zones are watered in response to a programmed irrigation unless they have the *skip* function ticked

Typical irrigation set-up

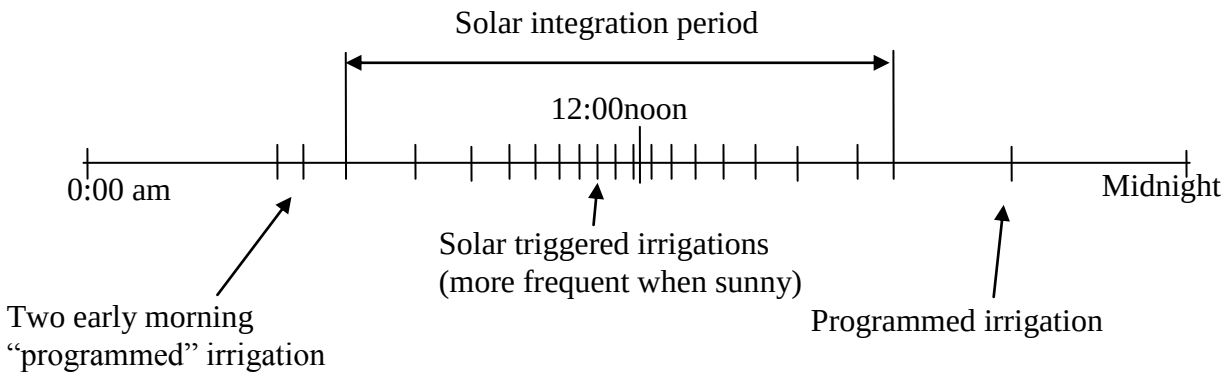

4 Quick set-up for EC plus pH feedback systems

1) Install the controller as described in section 6 ensuring it is shaded from the sun and in a dry, well-ventilated area.

2) Set the selector switch inside the side cover as follows:-

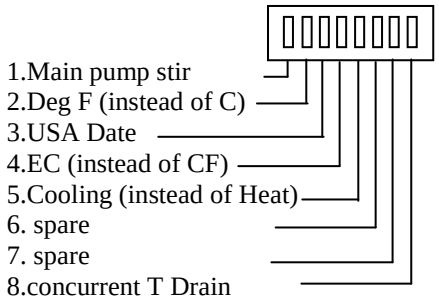

The switches can be set to suit your personal preference.

3) Connect the EC probe and temperature sensor as described in section 5
4) Connect the injection pumps and/or solenoid valves as shown in section 5
5) Connect the PC data communications as shown in section 5
6) Install the CompuGrow software on the PC as described in section 5
7) Set the communications address at the controller and at the PC as described in section 5 and check that the communications works OK.
8) Calibrate the EC and pH sensors as described in section 7
9) Set up the dosing set-points as described in section 5
10) When first installed and set-up it is always a good idea to fill the stock tanks (A & B fertilizer, acid and alkali tanks) with water first and observe the dosing operation for a while. This will also give you an opportunity to test for leaks. and check for equal and appropriate quantities
11) Test the outputs by forcing them on and off from the PC “Status” tab or from the controller “overrides” sub menu. NOTE: Only force an injection pump on while the main pump is running.
12) When everything has been checked out, fill the A & B drums with the fertiliser as directed and stir thoroughly until fully dissolved. Next fill the acid and alkali tanks as follows:- First add the water to each tank and then add acid and alkali to the water to achieve a MAXIMUM concentration of 15%; stir the mixture. Note that if strong acid/alkali is dosed into the nutrient solution it can cause a localized chemical reaction which will gradually cause the balance of the nutrient to change. Ideally the dose pumps or valves should be working at about 50% to 80% when performing a normal irrigation and you may need to adjust the concentration of the acid/alkali to achieve this.
13) Run the main pump (on manual) and note the EC reading. Next force both of the EC outputs to 50% and again note the EC reading. Stop the dose pumps by switching back to manual and then stop the main water pump. Enter the readings that you have just recorded in the *configuration*

5 Settings

The controller is set up using two methods :- 1) the switches under the connection cover and 2) from the PC or front panel. The switch settings are mainly to do with the installation configuration and are discussed under the "Installation - Initial Settings" section. In this chapter we will look at the everyday settings made at the PC or from the controller front panel.

On the PC the settings are arranged into three main screens. The **CONFIGURATION** tab is where most of the commissioning settings are made. In normal day-to-day operations you will not often need to visit this tab.

The **STATUS** tab is used to view the current readings and the status of the irrigation system. It also has a small number of settings.

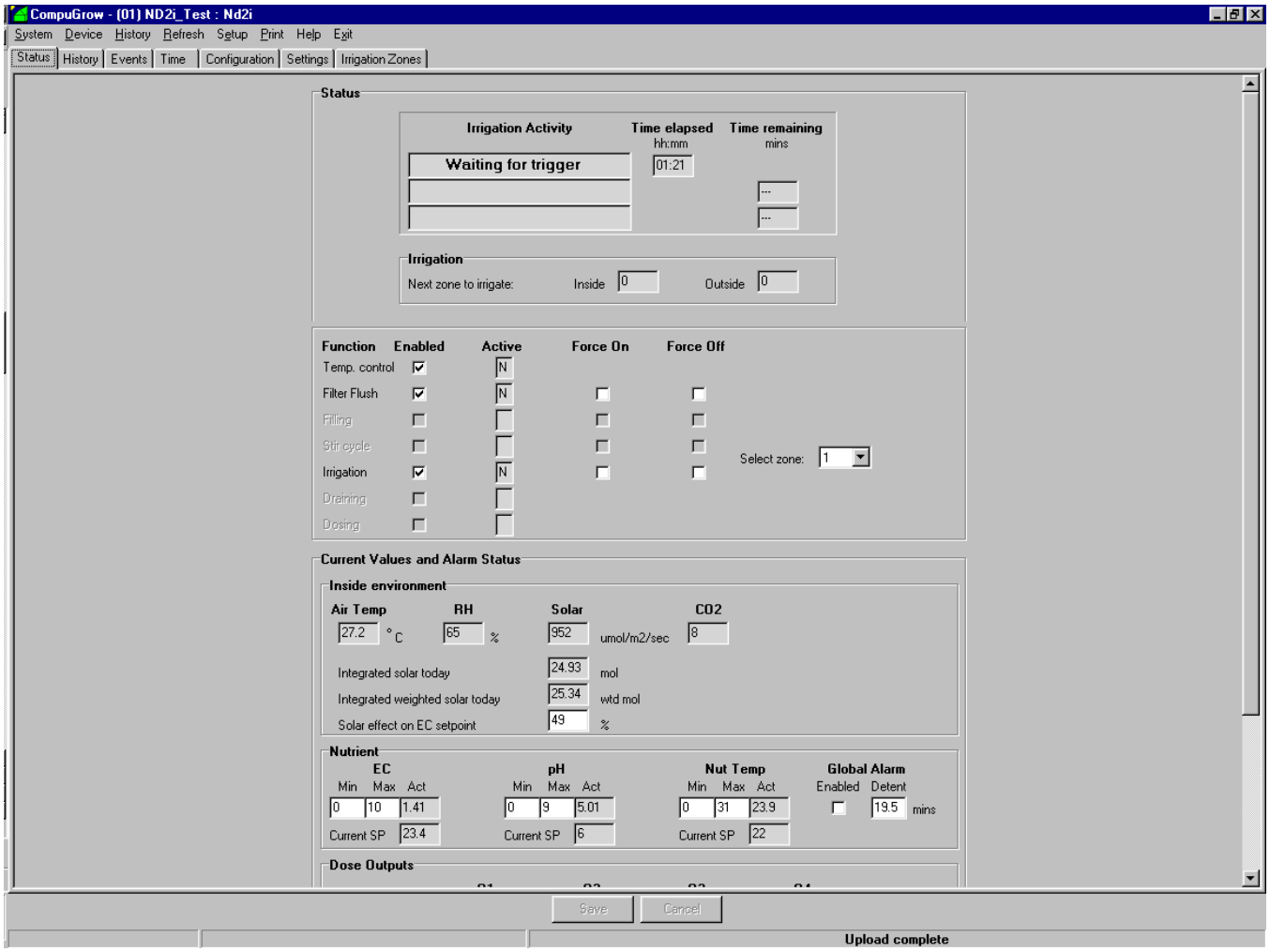

At the bottom of the "Inside environment" box there is an item of particular interest. The "solar effect on EC" shows the current effect that the environmental conditions will have on calculating the EC. Of course, this will only be relevant if the "sunny" set point is different from the "cloudy" set point. The effect is expressed as a percentage and on power-up it starts with a value of 50% indicating that the calculated set-point will be mid-way between the sunny and cloudy values. Then, depending on conditions it will drift up in dull weather or down in bright weather. If it reaches 0% the calculated set point will be at the "sunny" set point value and at 100% at the cloudy set-point value. The rate at which it can drift is determined in the settings tab

by the “max rate of EC change” setting which is in percentage points per hour. A reasonable value here is perhaps between 2% and 10% per hour. This ensures that the change is gradual and will only move toward one extreme or the other over a period of a day or more. Note that the “Solar effect on EC” is a settable reading. This means that although it is normally changed by the controller, it is possible for the user to overwrite it at any time.

The **IRRIGATION ZONE** tab contains all of the detailed settings for each of the irrigation zones. In this tab only the number of zones specified in the configuration tab will display. Each zone has further settings which are accessed by clicking on the zone number button at the beginning of each line. Mix 1 is the default mix and when selected normal dosing occurs. If mix 2 is selected, then normal dosing occurs PLUS the “mix 2” output will be energized.

In the **HISTORY** tab can be found the graphical display where the logged data is displayed. The view can be configured by clicking on the history view button on the top menu. By configuring a view we mean that particular variables can be switched on or off and the colours of each line changed to make it more visible. A view that is likely to be used frequently can be saved as a “favourite” so that it can be easily retrieved when next needed.

Note that some of the variables are not visible in the normal history screen. Items like EC, pH and the output percentages are only valid for short periods of time during an irrigation. For this reason these are only visible in the “zoomed-in” view of an irrigation. In the normal view, every irrigation is displayed as a number on the “Irrigation Wait” graph. The number indicates the number of the irrigation zone that was irrigated. If more than one zone is irrigated in a short space of time an asterisk is shown instead of a number.
In order to change from the normal history view to the “irrigation history” view you need to double click on the number or asterisk shown on the irrigation wait graph. The screen will now change and zoom in on that particular irrigation. In this view you are able to switch on and see the EC, pH and output percentages. A “return to normal history view” button at the bottom of the screen allows you to easily return to normal viewing.

From the history tab you are able to choose a menu item to export the logged data to an Excel spread sheet. This is useful for research and teaching institutes who wish to perform further analysis of the data

A useful trick with the history graph is to press ALT, CTRL and PRINT SCRN to capture the image to the windows clip board. It can then be pasted into another application like WORD or a picture editing program, where text etc can be added.

The **EVENTS** tab has a chronological list of events for each day. Each event is time stamped and so this gives a very precise record showing exactly when events such as irrigations occurred.

The settings required to set up a system are basically the same whether done at the PC or at the controller. Obviously it is much easier at the PC as you can view and access a large number of settings without constantly changing screens.

6 The Menu System

The menus are arranged in three or four levels. At the top level the 'main menu' shows the key groupings of settings and beneath that the sub-menus show the detail. To move from a main menu item down to its sub-menu, press the 'enter key'. When in a sub-menu, just press the 'exit/save' key to exit back up to the main menu. Alternatively, wait without pressing any keys and the controller will automatically return to mode 0 after about 20 seconds. Once you have reached the lowest level screen containing the actual readings or settings, you must use the right arrow to move to the next setting field which is on the right or on a line below the current cursor position. The left arrow will take you back to a previous field. Once positioned on a setting, use the up and down arrows to alter the value. Remember, that after a setting in a screen have been changed, you must press the exit (save) button to make the change permanent. If you wait too long before pressing save/exit, it will time out and your setting change will be lost.

Most of the settings are reasonably self explanatory or their function has been explained previously and we will review them only briefly.

Calibrate.
EC, pH and Temperature may be calibrated here. Note that when calibrating pH, always start by calibrating at pH 7 and then move on to pH 4 (after rinsing the probe in water). The EC or CF can be calibrated at any value so you should obtain a standard test solution close to the value that you will be growing at. Most laboratories can supply EC test solution to any value requested.
Before calibrating EC/CF ensure that the probe face is absolutely clean and that the shroud (if used) is replaced fully. If a shroud is not used then the probe must be held so that its face is suspended in mid-solution. Also, with any of the calibrations, allow the probe to stand in the test solution for as long as possible (at least 10 minutes) before calibrating. This is to allow the temperature compensation to fully adjust and for any readings to completely settle.

Time and Date
The clock-calendar is used to time and date stamp each sample for logging to the PC. It is also used to determine the time zone (day/night) changes for dosing and irrigation. The clock will need correcting from time-to-time. In addition the dusk and dawn times will need adjustment to compensate for the seasonal changes.
The dusk and dawn time can be set to any values to define the two time zones. These do NOT have to be aligned to the true dawn and dusk.

Alarms
This sub-menu allows you to set the upper and lower limits for all variables. **Note that the limits for EC and pH do not apply during between irrigations.** The purpose of the "alarm detent" is to allow a little time after a fault is detected before the alarm sounds. This is to reduce false triggering from events such as a bubble in the water lowering the EC for example. A good starting point for this is between one and five minutes.

MENU LAYOUT

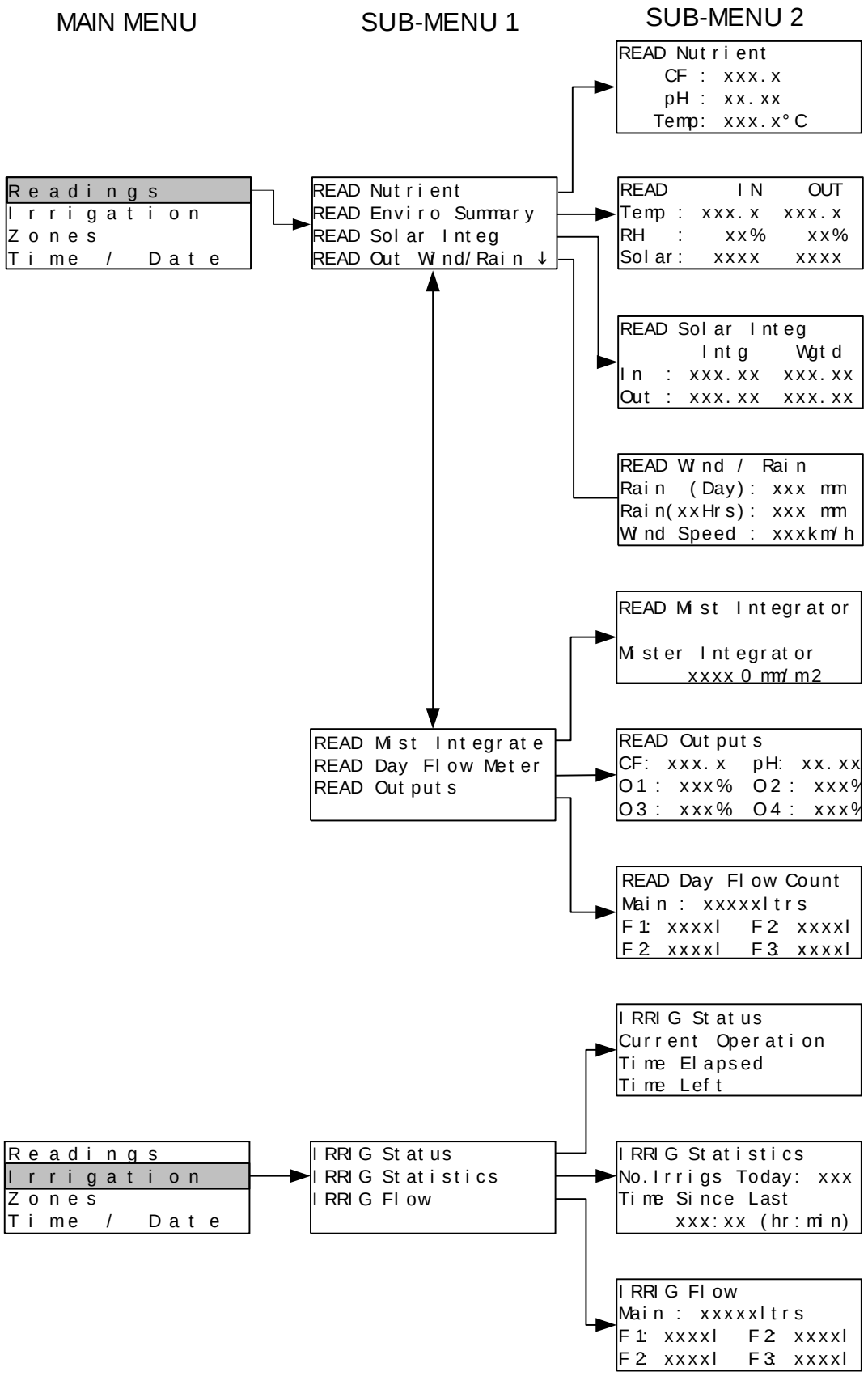
MAIN MENU
SUB-MENU 1
SUB-MENU 2
Readings
Irrigation
Zones
Time / Date
READ Nutrient
READ Enviro Summary
READ Solar Integ
READ Out Wind/Rain ↓
READ Nutrient
CF : xxx.x
pH : xx.xx
Temp: xxx.x°C
READ IN OUT
Temp : xxx.x xxx.x
RH : xx% xx%
Solar: xxxx xxxx
READ Solar Integ
Intg Wgtd
In : xxx.xx xxx.xx
Out : xxx.xx xxx.xx
READ Wind / Rain
Rain (Day): xxx mm
Rain(xxHrs): xxx mm
Wind Speed : xxxkm/h
READ Mist Integrate
READ Day Flow Meter
READ Outputs
READ Mist Integrator
Mister Integrator
xxxx 0 mm/m2
READ Outputs
CF: xxx.x pH: xx.xx
O1 : xxx% O2 : xxx%
O3 : xxx% O4 : xxx%
READ Day Flow Count
Main : xxxxxltrs
F1: xxxxl F2: xxxxl
F2: xxxxl F3: xxxxl
Readings
Irrigation
Zones
Time / Date
IRRIG Status
IRRIG Statistics
IRRIG Flow
IRRIG Status
Current Operation
Time Elapsed
Time Left
IRRIG Statistics
No.Irrigs Today: xxx
Time Since Last
xxx:xx (hr:min)
IRRIG Flow
Main : xxxxxltrs
F1: xxxxl F2: xxxxl
F2: xxxxl F3: xxxxl

ZONES

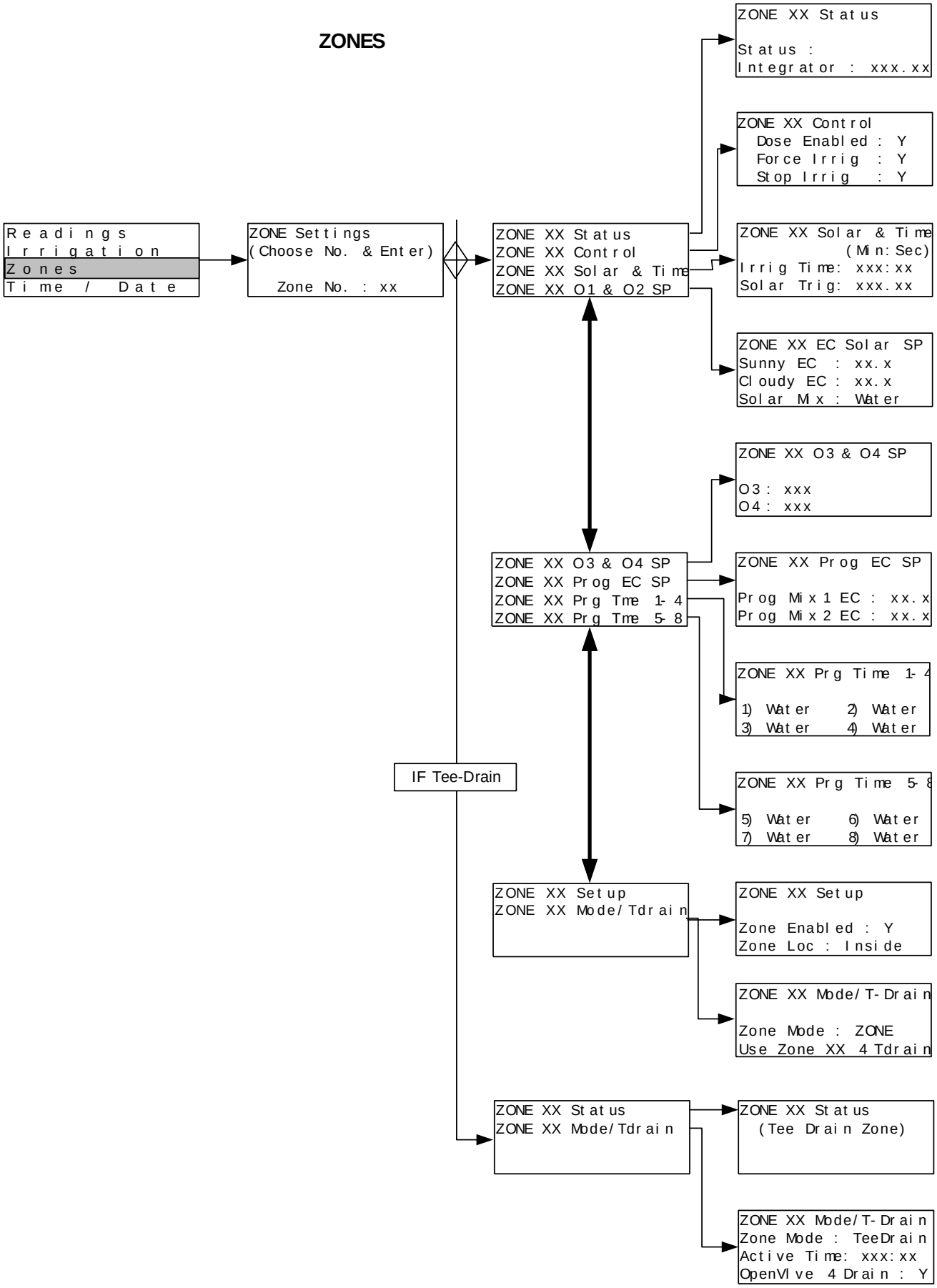
Readings
Irrigation
Zones
Time / Date
ZONE Settings
(Choose No. & Enter)
Zone No. : xx
ZONE XX Status
ZONE XX Control
ZONE XX Solar & Time
ZONE XX O1 & O2 SP
ZONE XX Status
Status :
Integrator : xxx.xx
ZONE XX Control
Dose Enabled : Y
Force Irrig : Y
Stop Irrig : Y
ZONE XX Solar & Time
(Min:Sec)
Irrig Time: xxx:xx
Solar Trig: xxx.xx
ZONE XX EC Solar SP
Sunny EC : xx.x
Cloudy EC : xx.x
Solar Mix : Water
ZONE XX O3 & O4 SP
O3 : xxx
O4 : xxx
ZONE XX O3 & O4 SP
ZONE XX Prog EC SP
ZONE XX Prg Tme 1-4
ZONE XX Prg Tme 5-8
ZONE XX Prog EC SP
Prog Mix 1 EC : xx.x
Prog Mix 2 EC : xx.x
ZONE XX Prg Time 1-4
1) Water 2) Water
3) Water 4) Water
ZONE XX Prg Time 5-8
5) Water 6) Water
7) Water 8) Water
IF Tee-Drain
ZONE XX Setup
ZONE XX Mode/Tdrain
ZONE XX Setup
Zone Enabled : Y
Zone Loc : Inside
ZONE XX Mode/T-Drain
Zone Mode : ZONE
Use Zone XX 4 Tdrain
ZONE XX Status
ZONE XX Mode/Tdrain
ZONE XX Status
(Tee Drain Zone)
ZONE XX Mode/T-Drain
Zone Mode : TeeDrain
Active Time: xxx:xx
OpenVlve 4 Drain : Y

TIME AND DATE

```
Readings
Irrigation
Zones
Time / Date
```

```
TIME Time / Date
TIME Solar Strt/Stop
```

```
TIME Time / Date

  xx:xx.xx   (Time)
  xx/xx/xx   (Date)
```

```
TIME Solar Strt/Stop

        Start    Stop
Time :  xx:xx   xx:xx
```

ALARMS

```
Alarms                ↑
Calibration
Setup
```

```
ALARMS Setup
ALARMS Enable (Flow)
ALARMS Settings
```

```
ALARMS Setup

Alarm Enabled :  Y
Alrm Detent:  xx.xmin
```

```
ALARMS Enable (Flow)
Main Flow :  Y
Fert 1:  Y   Fert 2:  Y
Fert 3:  Y   Fert 4:  Y
```

```
ALARMS Settings
       EC    pH   NTemp
Min:  xx.x  xx.x  xxx°C
Max:  xx.x  xx.x  xxx°C
```

CALIBRATION

```
Alarms                ↑
Calibration
Setup
```

```
NUT Calibrate EC
NUT Calibrate pH7.0
NUT Calibrate pH4.0
NUT Factory Defaults
```

```
NUT Calibrate EC
Inc/Dec Until Corrct

    CF :   xx.x
```

```
NUT Calibrate pH7.0
Inc/Dec Until Corrct

    pH :  xx.xx
```

```
NUT Calibrate pH4.0
Inc/Dec Until Corrct

    pH :  xx.xx
```

```
NUT Factory Defaults

Press Enter to Reset
Nutrient Calibration
```

SETUP

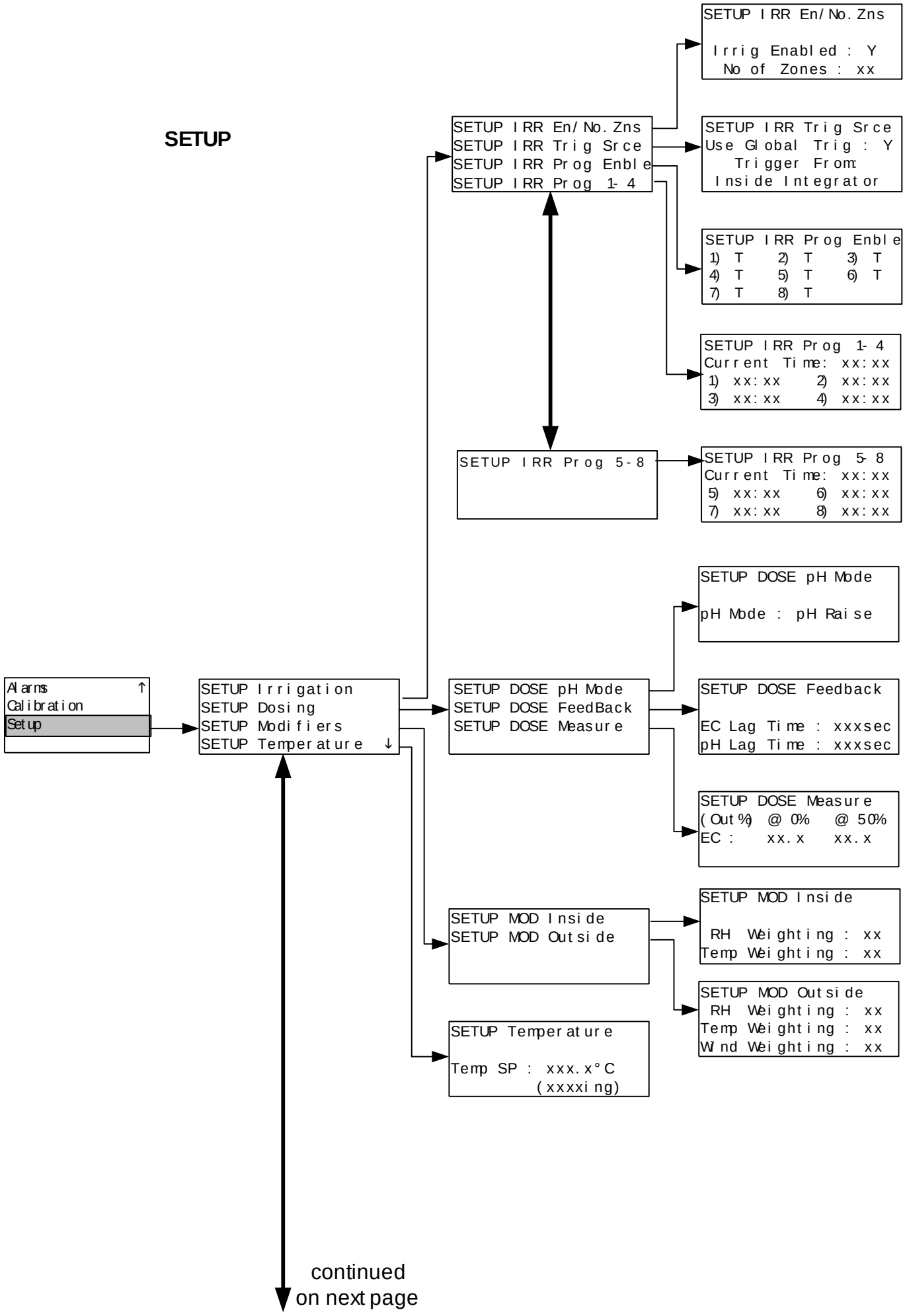
Alarms ↑
Calibration
Setup
SETUP Irrigation
SETUP Dosing
SETUP Modifiers
SETUP Temperature ↓
SETUP IRR En/No.Zns
SETUP IRR Trig Srce
SETUP IRR Prog Enble
SETUP IRR Prog 1-4
SETUP IRR En/No.Zns
Irrig Enabled : Y
No of Zones : xx
SETUP IRR Trig Srce
Use Global Trig : Y
Trigger From:
Inside Integrator
SETUP IRR Prog Enble
1) T 2) T 3) T
4) T 5) T 6) T
7) T 8) T
SETUP IRR Prog 1-4
Current Time: xx:xx
1) xx:xx 2) xx:xx
3) xx:xx 4) xx:xx
SETUP IRR Prog 5-8
SETUP IRR Prog 5-8
Current Time: xx:xx
5) xx:xx 6) xx:xx
7) xx:xx 8) xx:xx
SETUP DOSE pH Mode
SETUP DOSE FeedBack
SETUP DOSE Measure
SETUP DOSE pH Mode
pH Mode : pH Raise
SETUP DOSE Feedback
EC Lag Time : xxxsec
pH Lag Time : xxxsec
SETUP DOSE Measure
(Out%) @ 0% @ 50%
EC : xx.x xx.x
SETUP MOD Inside
SETUP MOD Outside
SETUP MOD Inside
RH Weighting : xx
Temp Weighting : xx
SETUP MOD Outside
RH Weighting : xx
Temp Weighting : xx
Wind Weighting : xx
SETUP Temperature
Temp SP : xxx.x°C
(xxxxing)
continued
on next page

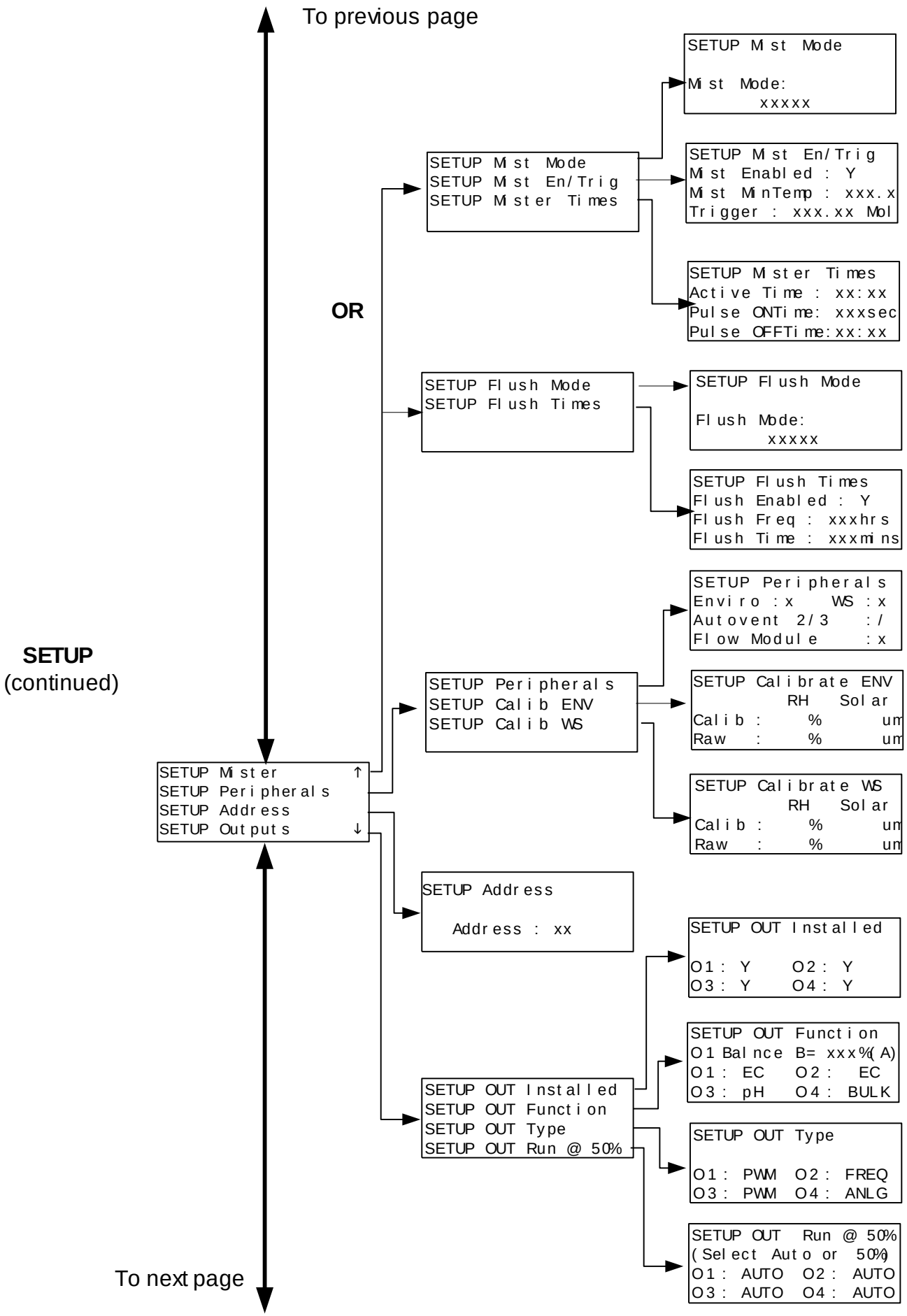
To previous page
SETUP
(continued)
SETUP Mister ↑
SETUP Peripherals
SETUP Address
SETUP Outputs ↓
OR
SETUP Mist Mode
SETUP Mist En/Trig
SETUP Mister Times
SETUP Mist Mode
Mist Mode:
xxxxx
SETUP Mist En/Trig
Mist Enabled : Y
Mist MinTemp : xxx.x
Trigger : xxx.xx Mol
SETUP Mister Times
Active Time : xx:xx
Pulse ONTime: xxxsec
Pulse OFFTime:xx:xx
SETUP Flush Mode
SETUP Flush Times
SETUP Flush Mode
Flush Mode:
xxxxx
SETUP Flush Times
Flush Enabled : Y
Flush Freq : xxxhrs
Flush Time : xxxmins
SETUP Peripherals
SETUP Calib ENV
SETUP Calib WS
SETUP Peripherals
Enviro :x WS :x
Autovent 2/3 :/
Flow Module :x
SETUP Calibrate ENV
RH Solar
Calib : % um
Raw : % um
SETUP Calibrate WS
RH Solar
Calib : % um
Raw : % um
SETUP Address
Address : xx
SETUP OUT Installed
SETUP OUT Function
SETUP OUT Type
SETUP OUT Run @ 50%
SETUP OUT Installed
O1: Y O2: Y
O3: Y O4: Y
SETUP OUT Function
O1 Balnce B= xxx%(A)
O1: EC O2: EC
O3: pH O4: BULK
SETUP OUT Type
O1: PWM O2: FREQ
O3: PWM O4: ANLG
SETUP OUT Run @ 50%
(Select Auto or 50%)
O1: AUTO O2: AUTO
O3: AUTO O4: AUTO
To next page

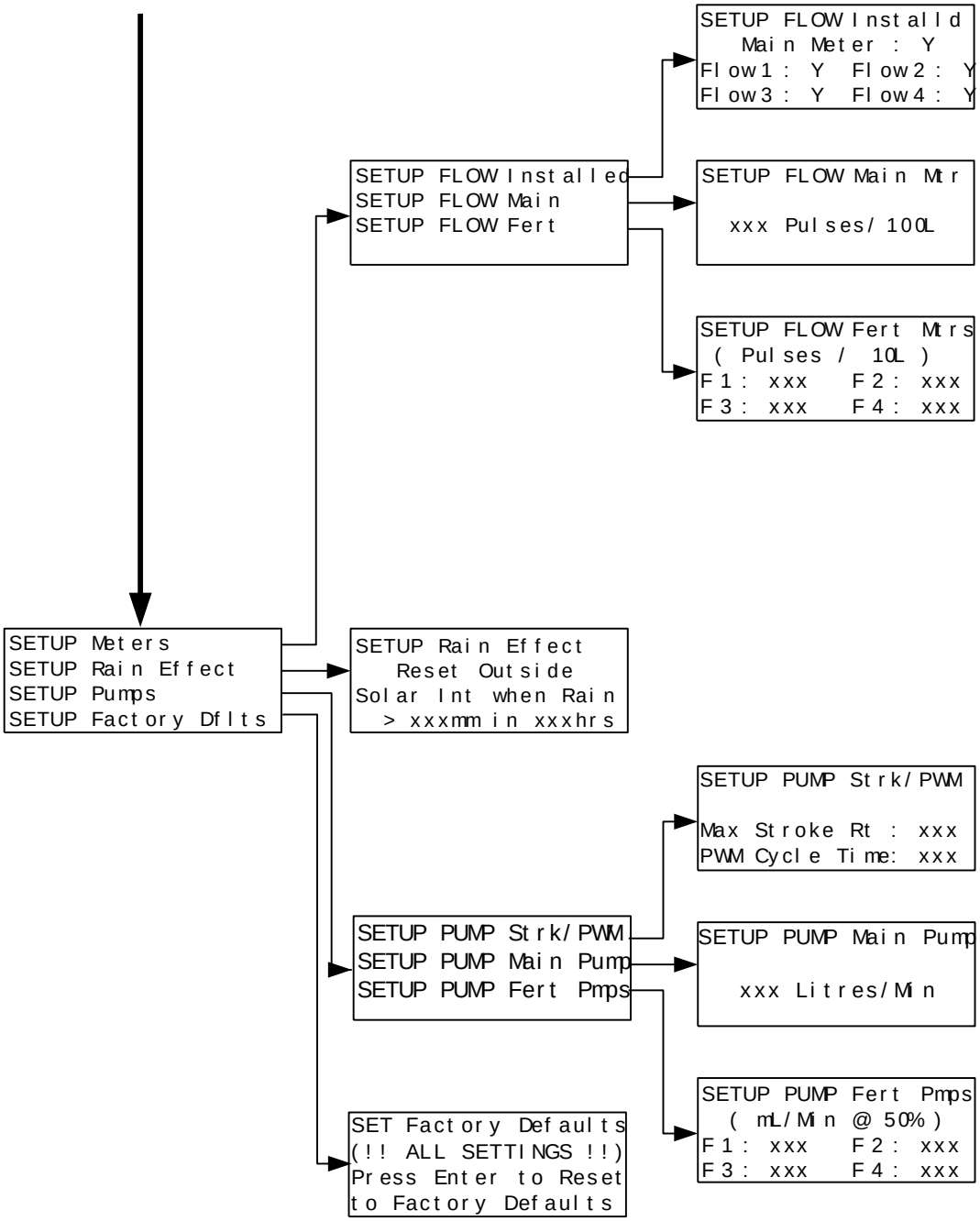

SETUP MENU

The Setup menu is one of the most critical menus as it is the area where all of the initial configuration details are stored. For example, the number of irrigation zones, method of triggering irrigations, time programmed irrigations, pH mode, dosing method, mode and control loop timings are all entered here. The peripherals connected and their calibrations are also found here as is, the dosing output allocation and configurations. Setup also contains flow meter installation information such as what meters are installed and their respective pulses per litre information.

SETUP/Address
This is the address number that is sent out by the PC when it wants to communicate with the controller. The same number must be entered in the PC software when this is set up. If you have more than one controller or monitor connected to the PC then each one must have a different address set at the unit and at the PC. One other reading here is the temperature inside the box. This maximum of this temperature is recorded for warranty purposes as the box temperature must not be permitted to exceed 60deg C.

SETUP Factory Defaults - BEWARE!!
This screen allows all of the settings on the controller to be returned to their factory values. Before invoking this ensure that the setting have all been saved on the PC so that it will be easy to reinstate the controller to its proper settings. In the event of a controller malfunction, this screen may be used to check that the malfunction has not been caused by an incorrect setting.

7. Installation
7.1 General Installation Instructions

IMPORTANT: The NutriDose and its ancillary modules must be installed (and stored) in the shade. It must never be left in full sunlight or in very hot conditions such as in an automobile. Normally this means that a shade cover must be provided in the greenhouse to protect the monitor from the suns rays. This is important as the surface temperatures of items in a greenhouse in summer, in full sun, may easily exceed 60 deg C (140 deg F). If this is allowed to happen the warranty is voided. The shade cover will also prevent condensation drips falling onto the controller.

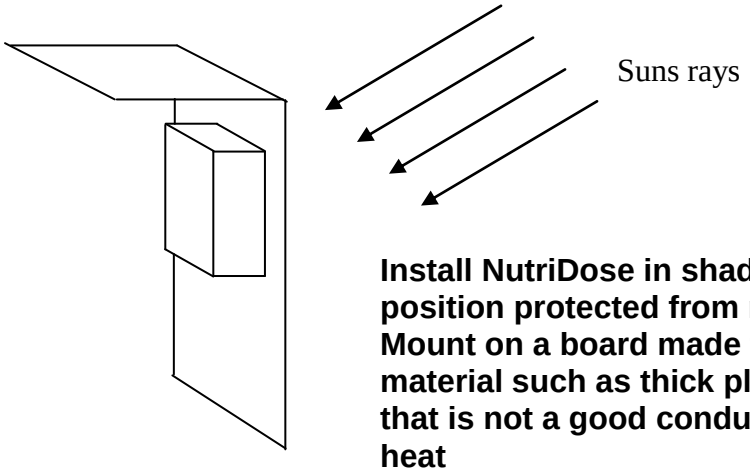

Position the controller close to the sample point but not where it is liable to get splashed.

Injection
Injection can be done in a number of ways including proportional pumps, stroke pumps, venturis with valve or pump control.

Proportional pumps are the most direct method of injection. These pumps have a built-in speed control which responds proportionally to a 0 to 10V signal from the controller. This means that a voltage of 0V produces zero injection, 5V produces 50% injection and 10V gives 100% injection.

Stroke pumps are available in smaller sizes and are often used to inject acid for pH correction. A stroke pump requires a pulse frequency such that a low frequency gives a low injection rate and a high frequency, a high injection rate. Maximum frequencies of 100 pulses per minute are common. It is a good idea to dilute the acid so that the pump is normally running at about 70% of its maximum frequency. Also remember that strong acid can cause local chemical reactions to take place at the point that it enters the water which can denature the chemical composition of the mix. Never use acid that is stronger than 10% at the injection point.

Another common method uses venturi injectors to convert from the pressure in the pipe to a suction. Then it is necessary to restrict and control the flow of the chemical additive by means of a valve or low pressure pump. If a valve is used then a choice can be made between a proportional valve whose opening can be controlled by means of a 0 to 10V signal voltage or else a solenoid valve can be pulsed on/off. The pulsed proportional valve is usually the lowest cost method and can produce good results. In

this method a cycle time is specified – perhaps 8 seconds and then the controller pulses the valve on for a proportion of this time. So, to provide a very small injection, the valve may be opened for say 1 second and then off for 7 seconds. To achieve a slightly stronger mix it might open for 2 seconds and then close for 6. By having steps of just 1% quite accurate results can be obtained. If this injection is performed prior to the main pump, filter and Autogrows twisted vortex mixer then the there will be sufficient mixing to achieve a very even solution.

General

Before installation draw a diagram showing exactly where all of the items will be positioned. Refer to the suggested layouts in section 2 for ideas on this. Firmly mount all heavy and vibrating equipment such as pumps, water meters etc trying to simplify pipe layouts. Large items should such as the main water meter, pump, sample assembly should be fitted with mac unions to make removal easy.

Position electrical and electronic equipment away from areas where it could be splashed or be affected by chemical (acid) fumes. If in doubt, install a plastic screen to protect this equipment.

Do not place any equipment under pipe joints where drips are likely to occur. Make absolutely sure that the pipe work does not leak at all before filling tanks with chemicals.

Follow carefully the manufacturers instructions for glueing PVC pressure pipe and fittings including the use of a primer. PVC pipe has to endure considerable stresses from expansion, contraction and water hammer shock and joints can start to leak if not made properly at the time of installation.

Outside weather station installation

If a weather station is being installed then it should be positioned within the outside grow beds and preferably at about the height of the crop. The wind sensor should be placed just a little above the top of the crop. The weather station may be mounted on a wooden post such as a ground treated 100X100 fence post. Preferably mount it at a convenient height for servicing but out of the reach of small children and animals.

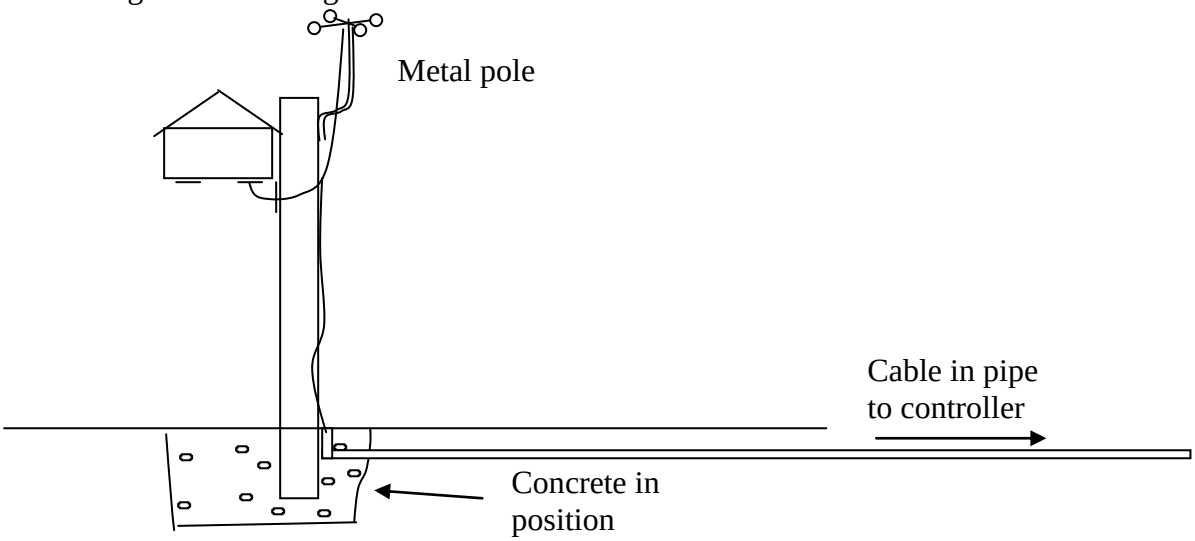

7.2. Connection diagrams

IMPORTANT:- Before connecting the controller to the mains power supply, check that the voltage sticker on the side of the case matches the voltage for your mains power. This will either be 100-120V or 200-240V.

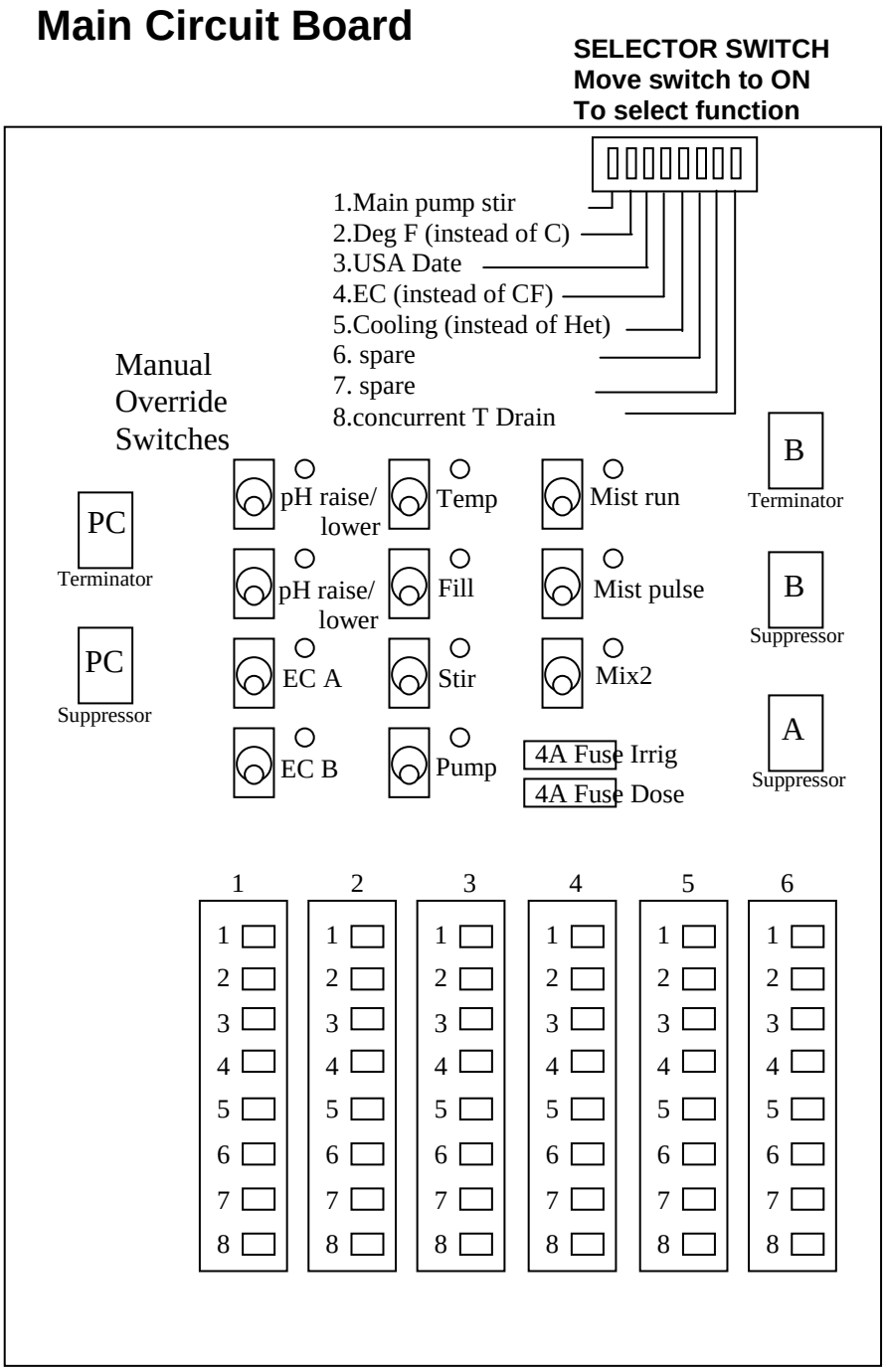

Note that only low voltages (not mains) can be connected to these contacts.

The manual override switches have three positions:-
DOWN=Automatic; CENTRE = OFF; UP = ON

1

1	Blue	EC probe
2	Brown	
3	Green	
4		High level float
5		
6	Red +5	Temp Sensor
7	White	
8	Black Gnd	

2

1	3	pH L	Proportional Outputs 0-10V
2	4	pH R	
3	1	EC A	
4	2	EC B	
5	GND		
6	GND Gr,Gr/Wh		COMM PC
7	A Blue/Wh		
8	B Blue		

3

24V AC outputs

1	(3) pH **lower** (or raise)
2	
3	(4) pH **raise** (or lower)
4	
5	(1) EC A
6	
7	(2) EC B
8	

4

24V AC outputs

1	Temperature
2	
3	Fill pump
4	
5	Stir
6	
7	Irrig Pump
8	

5

24V AC outputs

1	Mist run
2	
3	Mist pulse
4	
5	Mix2
6	
7	ALARM (contact closure)
8	

6

1	24V AC L (fused)	
2	24V AC N	
3	Gnd (Green,Gr/Wh)	COMM **B** (to AV, WS etc)
4	A Blu/Wh	
5	B Blue	
6	Gnd (Green,Gr/Wh)	COMM **A** (to ES, minders, zone expander)
7	A Blu/Wh	
8	B Blue	

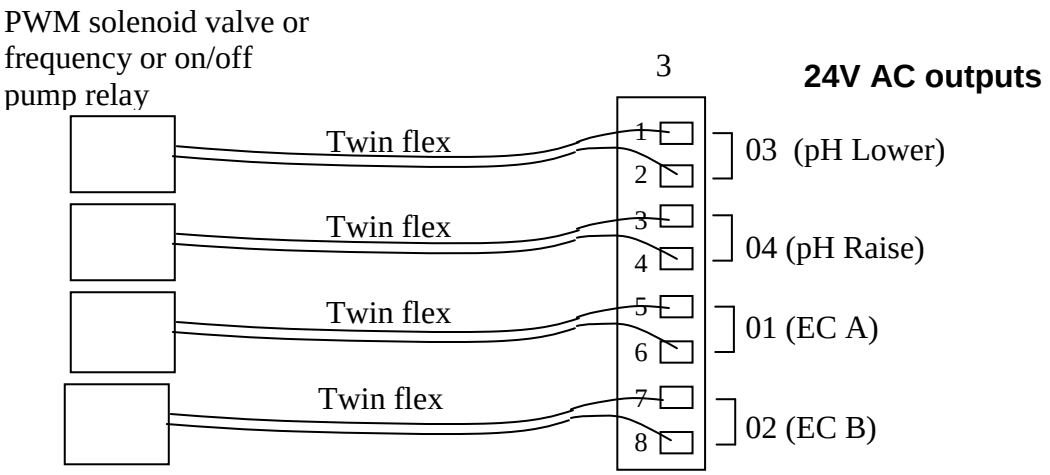

Connection of dosing relays for PWM solenoid valves or on/off pumps

Connection to Jesco Magdos DE8 Pump

The Magdos pump requires a mains power supply of 220-240V AC and a "voltage free" contact closure from the controller to control its stroke rate. The NutriDose II i controller produces a 24V AC output which must be converted to "voltage free" by the Autogrow special converter box. White and Brown wires go to the Magdos pump.

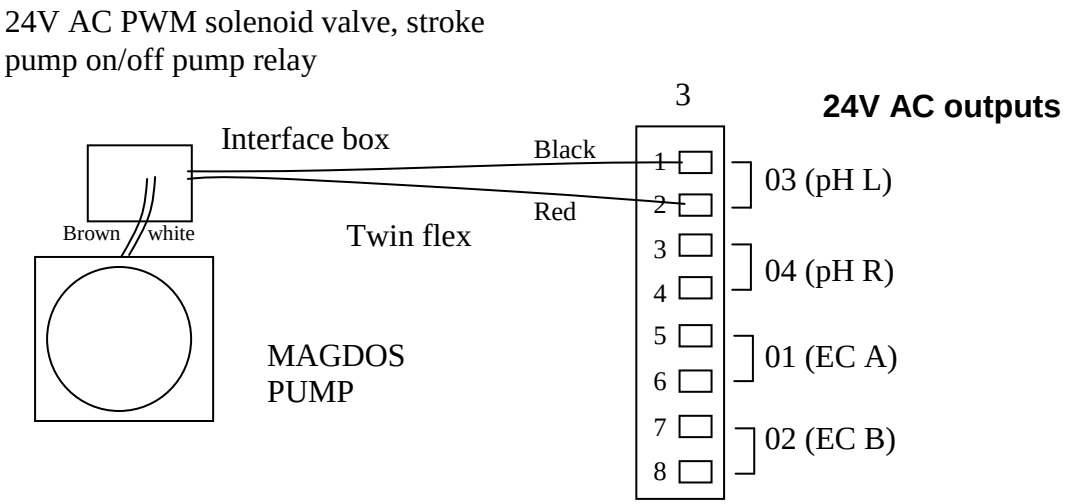

Connection of dosing relays for PWM solenoid valves or on/off pumps

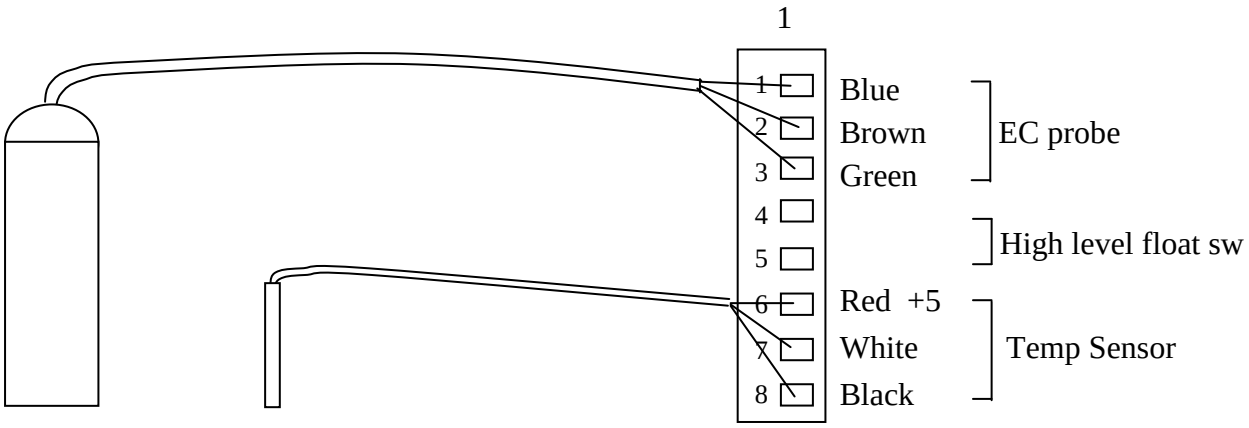

Connection of EC probe and temperature sensor
(the wires to both sensors may be extended)

High level float switch
The optional high level float switch may be used in a mixing tank system. If connected it should be arranged so that it's contacts are open when the tank is nearly full and close when the water is less than ¾ full. If this switch is connected, the controller will sense it and if the water level is low it will start the fill pump in order to fill the tank before starting the main pump to stir or irrigate.

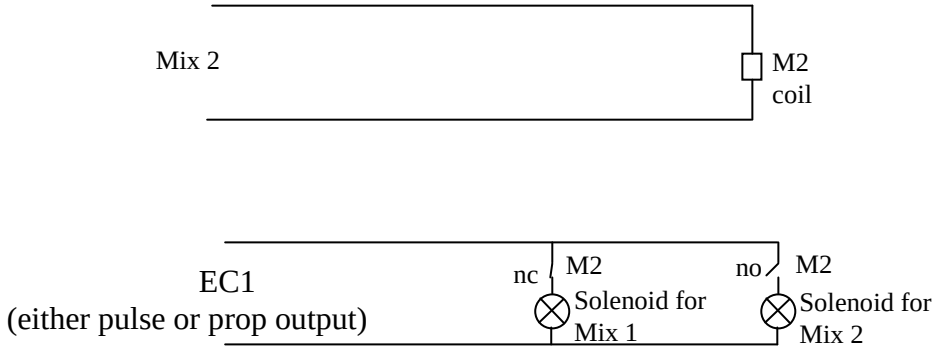

Relay for mix 1 – mix 2 nutrient selection

Connection of Zone expanders and Enviro Sensors

The zone expanders are connected to the NutriDose in the usual daisy chain fashion, looping the CAT5 cable from ND2 plug 6 (pins 6,7,8) from one zone expander to the next and so on then finally looping to the first Enviro sensor then on to any other Enviro Sensors. When you have more than one zone expander or more than one Enviro Sensor it is important to set their addresses correctly. (see below)

Connections from NutriDose to Zone expander and Enviro Sensor

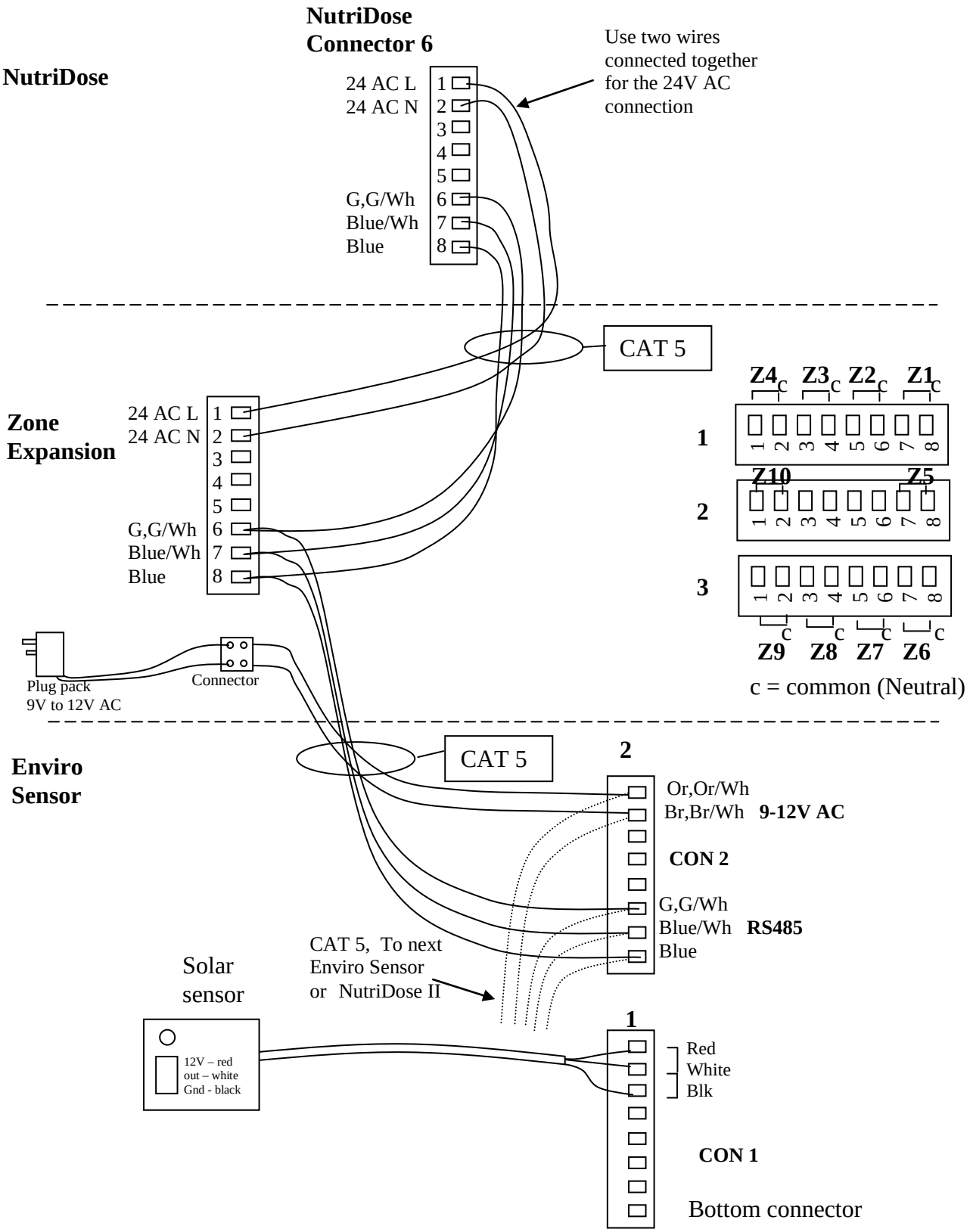

Weather Station connections

The Weather Station broadcasts a report of the weather every three seconds to as many AutoVent and/or NutriDose controllers that you have connected (maximum 128). The connecting bus (CAT 5 stranded cable) loops from one controller to the next. Only the two devices at the extreme ends of the cable should have their terminating modules installed. All intermediate devices must have their terminators removed. Note that the order of connection is not important and the diagram below shows only one possible ordering.

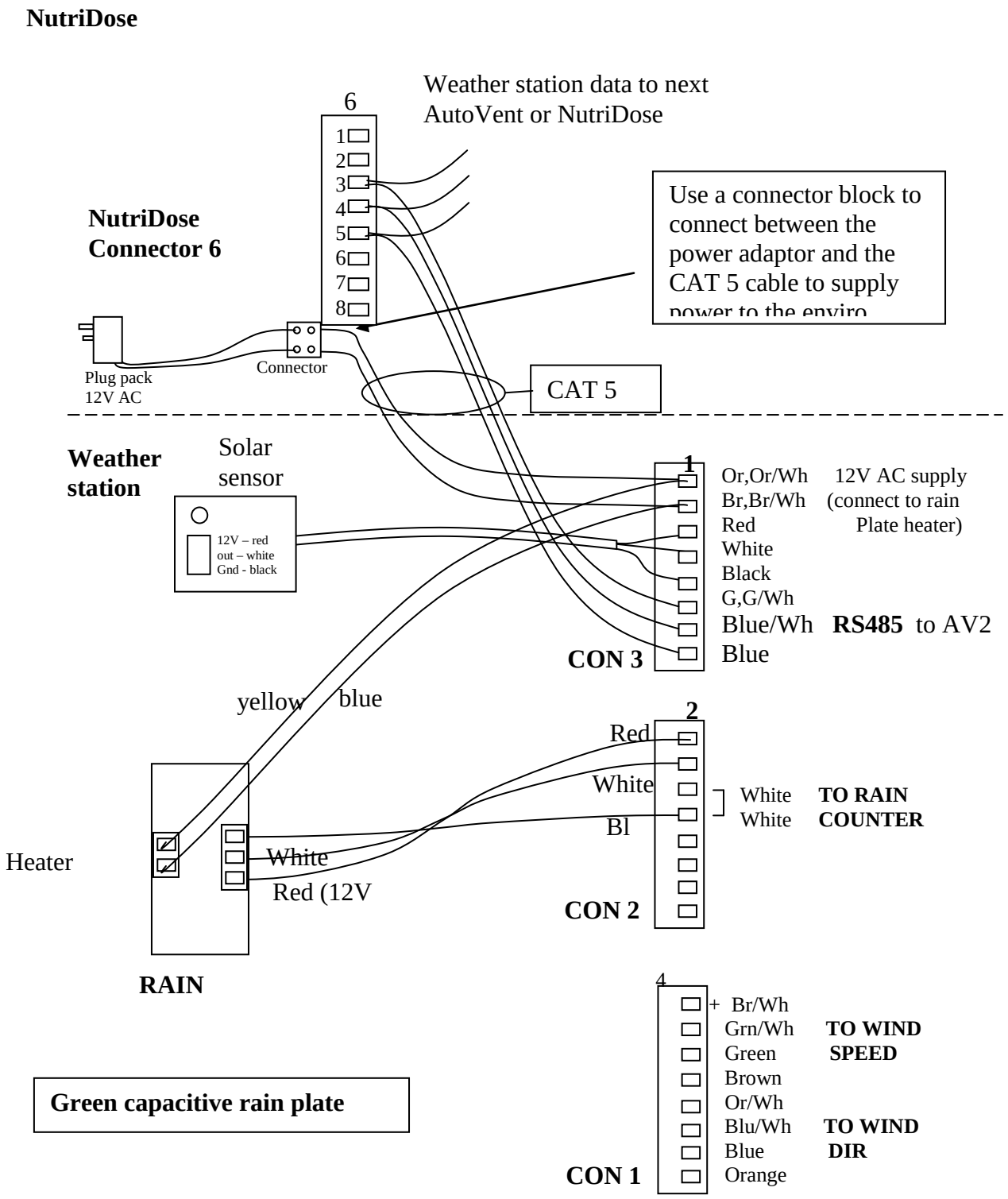

Connection of Wind Sensors to Weather Station

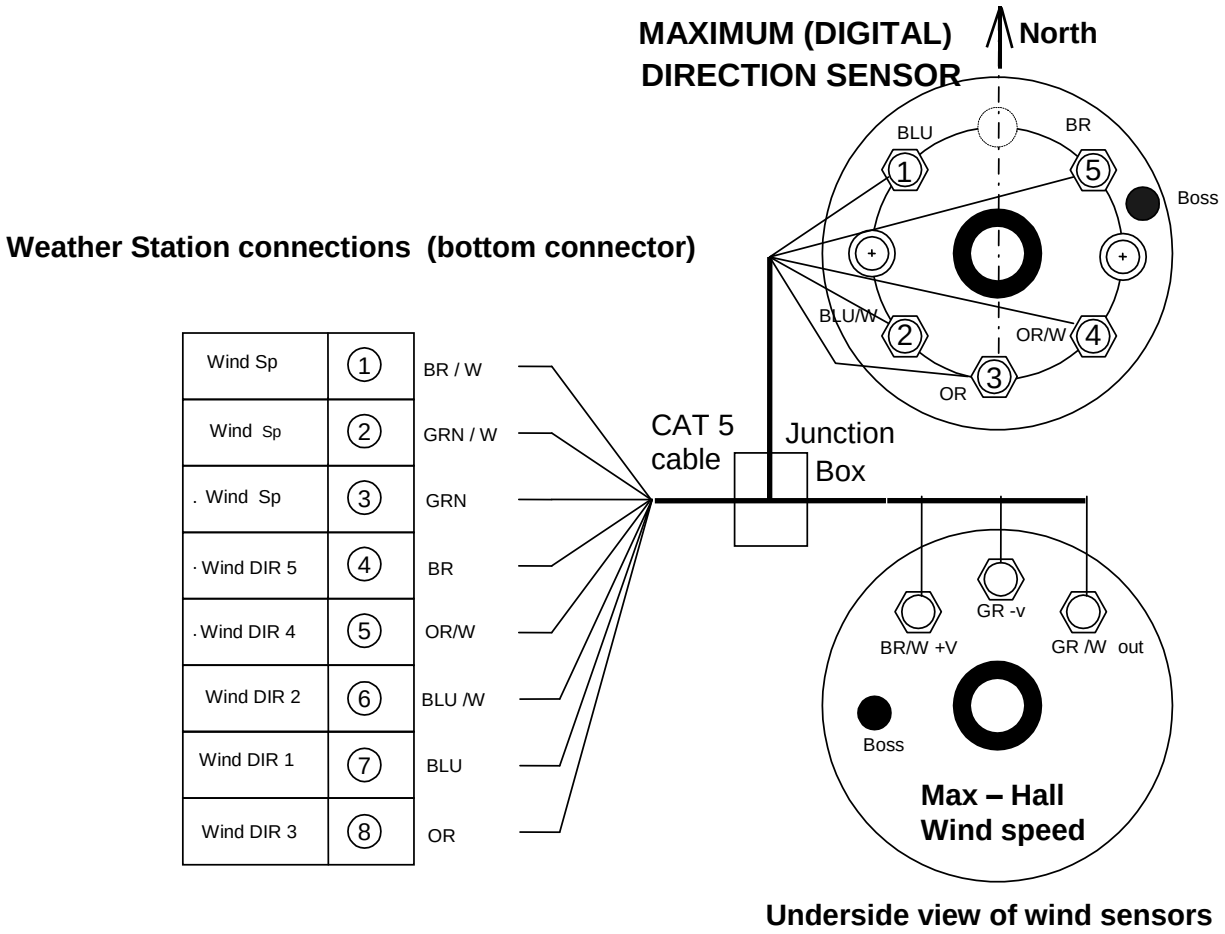

PC Connections

Use light coloured (so as not to attract heat) CAT5 stranded computer network cable between the PC interface and the NutriDose and/or monitors. This cable is "looped in" to each controller/monitor in a "daisy chain" fashion. The last monitor (and only the last monitor) in the chain must have a "terminator" fitted. Remember, when adding a further controller/monitor to remove the terminators from any monitor between the PC interface and the last monitor in the chain. See connection diagram below.

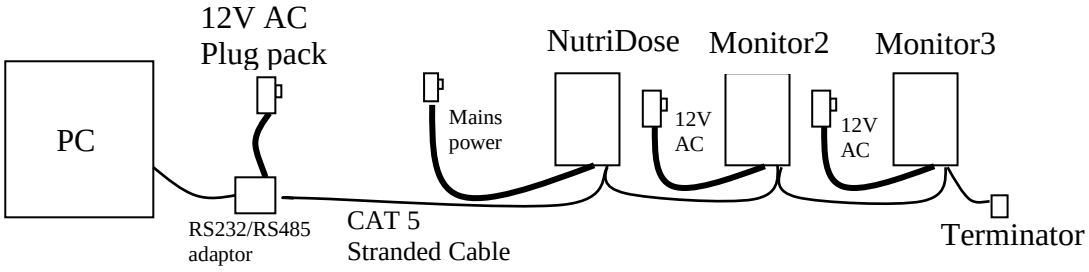

PC connection showing a single terminator at the end of the cable

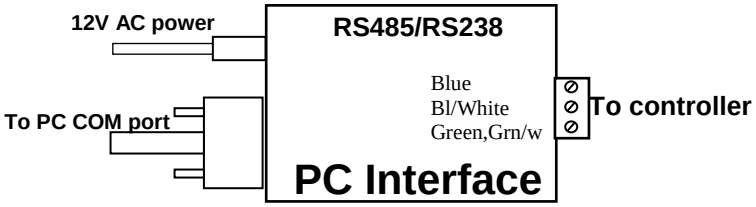

PC interface connections

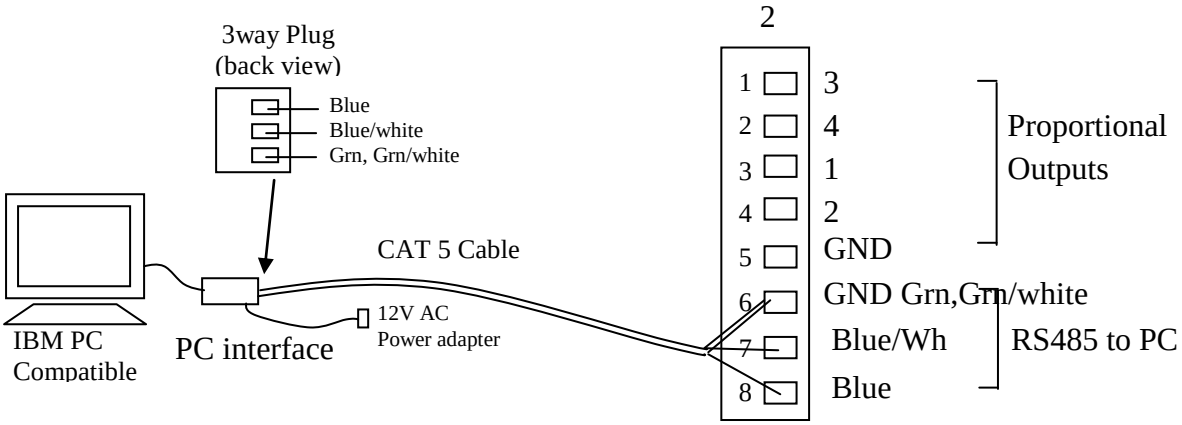

Connection of PC interface to the ND2 controller

Notes:

1) The modules may be connected in any order
2) For intermediate modules, the wires loop in such that the "A" wire from the controller connects to the "A" connection off the module and then loops back out to the "A" connecton of the next module. Similarly for the other connections.
3) The terminators should be removed from each of the intermediate modules and should only be left plugged in at the NutriDose II i and at the furthest module.

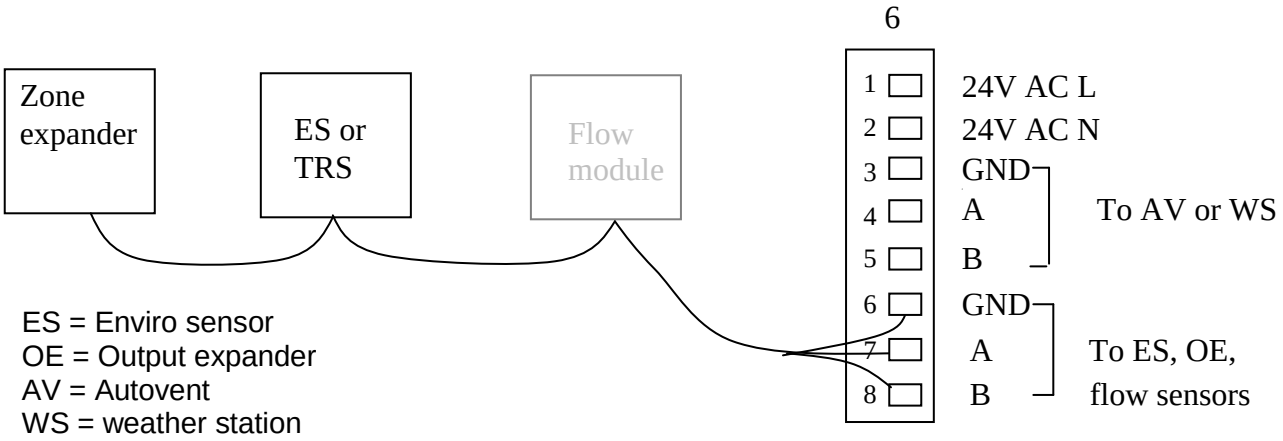

Connection to the main pump

As the outputs from the NutriDose are 24V AC they need to be connected to external relay whose contacts will switch the mains power to the pump as follows. **An electrician should be employed to do this work to ensure that it complies with local codes.**

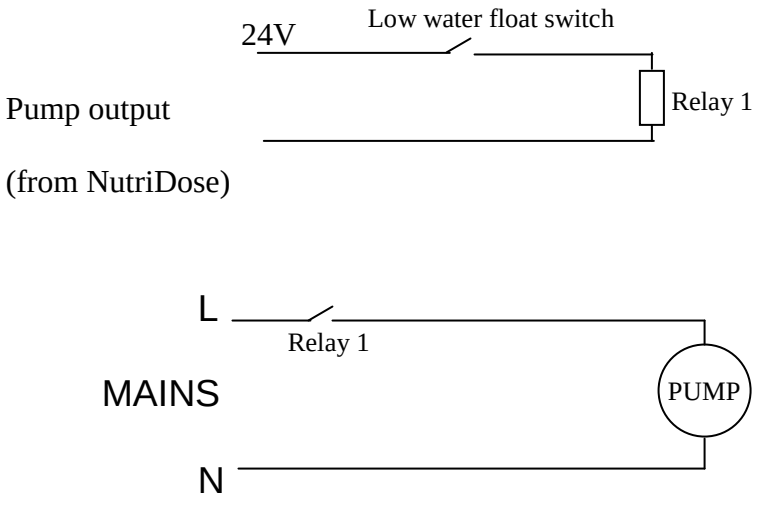

Note the use of a float switch to prevent the pump from running when the water is too low. This is useful where the water is from a tank, which could run dry.

Pump switch setting

Just above the connectors is a switch that selects between the two possible output modes for the pump. Ensure this is set to the RIGHT in order to provide 24V AC at the pump output.

7.3 Selection switch settings

A small DIP switch located at the top of the main NutriDose 2i connection board (inside the right hand cover) can be use to select the following alternatives.

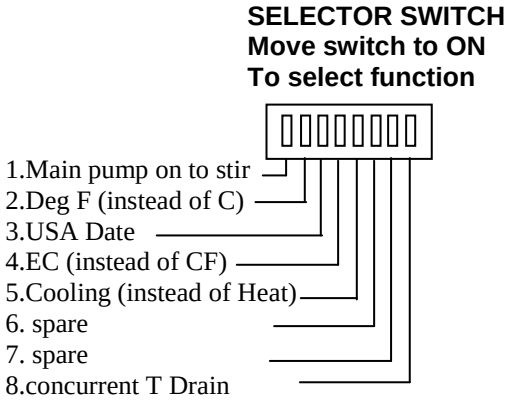

Switch function ND2i

Move the switch to the on position in order to enable the function. For example, if the date is required to be displayed in USA format then move switch 3 to the ON position. The temperature control output of the NutriDose II can be set to operate for heating or cooling. When in heating mode it comes on when the measured temperature drops below the set point by more than 0.5 deg C and goes off when the measured temperature rises above the setpoint by more than 0.5 deg C. When set for cooling it works in exact reverse of this.

The temperature control may be used for any purpose eg heating/cooling the nutrient, the grow bed or the root zone in aeroponics. If not used for control it still provides useful information to the grower.

Configuration of Zone expansion unit

The ten station zone expander units have dip switches that need to be set as follows:-

First unit (stations 1 to 10)	set all switches to OFF
Second unit (stations 11 to 20)	set switch 1 ON and switches 2,3 and 4 OFF
Third unit (stations 21 to 30)	set switch 2 ON and switches 1,3,4 OFF

At the connections to the zone expander not that all Common connections are internally connected together and you may run a single common cable to feed a group of station solenoid valves. This common cable can be connected to any connector marked with a “C”.

Configuration of Enviro sensors

These are configured in a similar way to the zone expanders except that instead of a dip switch, jumpers are used to short pins together as follows:

First unit	no jumpers
Second unit	jumper installed at position B
Third unit	jumper installed at position C
Fourth unit	jumper installed at position D

7.4 Installation of Compugrow Software on the PC

The CompuGrow software is suitable for PC compatible computer running Windows 95/98/Me. The computer must have a free serial COM port and should be a Pentium or better.
To install the software on your PC, insert the disk in drive A and execute the CompuGrow install programme. This will self-install the software onto your hard drive. You will be prompted during installation to select a folder. The default folder is C:\Program Files\ Compugro\ . When the program is executed it will create some sub-folders under the main folder. Each system (greenhouse group) installed will have its own sub-folder where the files for each of its monitors is stored. Each file will save the data for the whole current month.

The PC Interface. The RS484/RS232 optically isolated interface box should be installed adjacent to the PC computer. It requires a 12V AC supply. A lead is supplied to connect this to a free DB9 COM port on the back of the PC. The CAT 5 cable should be connected as shown above in the connections section.

Communication addresses. When the PC requests data from a controller or monitor it first sends the address for that unit. All units connected to the PC must have a different address and moving to SYSTEM/address sets this. The base address for these controllers is 34. Press the up or down arrows to change the address and when the required address is displayed, press save to store it in permanent memory. Set up the monitors in sequence starting with the first one at 34 and working upward from there. ie set the first monitor to 34 the second to 35 the third to 36 etc. Make a note of the address of each controller/monitor and its type as you will need to enter this information on the PC.

Terminator. If this is not the furthest controller/monitor from the PC then the terminator must be removed and the Data comms cable will be connected as shown and will then loop back out of the box and on to the next controller/monitor. Only the furthest unit should have a terminator connected. See connection diagrams above.

Configuring the PC software.
Before running the software it is best to install all the NutriDose controllers and monitors. They should all have their date and time setting checked and each device must have its address set to a unique number. Remember to save the addresses after making any changes and to note these down as you will need them when installing the PC software.

Setting the comms addresses
At the controller, press the MODE button until you reach the “SYSTEM” menu item. Then press “enter” (the up arrow) to enter this sub menu. The first item in this sub menu should be “address”. This is the communications address which is normally set be the factory to 34. If you have more than one controller or monitor in your system then they must all have different addresses. Just press the up and down arrows to get the addresses to be different. Although it doesn’t matter what they are it makes sense to work logically with the first one set to 34 the second to 35 etc. Make a note of the addresses associated with each controller.
Now, at the PC, run the compugrow.exe application and then set up as follows.
When the Compugrow software is first executed the immediate task is to select the required access level. In order to set the system up, security must either be “disabled”

or else you must select ‘advanced’ and enter the advanced password which is ‘consult’. The basic level password is ‘grower’. When in advanced mode you can disable security by selecting setup/security/disable.
Next, select the serial COM port that the RS232/RS485 adaptor is connected to. (Note that the adaptor must be one supplied by Autogrow as it performs some special functions as well as converting the signal levels.)

Under “setup” select “add” to add a new system then give the system a name (usually the name of the greenhouse eg lettuce 1) also check the controller box and monitor box if you also have any monitors in the system.

The idea of having different “systems” is that in a large installation where you might have a number of controllers and/or monitors in each greenhouse, it allows you to collect together all of the devices from the one greenhouse as one system so that when you view them they are not muddled in with devices from the other houses. However, if you are only intending say one or two controllers per greenhouse then it is probably more convenient to put all devices into one system.

Once a system has been added, select setup/system setup/configure/<*system name*>
And for each controller and monitor, add the address (as set at the actual controller), select the type of controller, enable it and finally click on “save”.
The PC will now try to communicate with the device and values should appear on the “Readings and Settings” tab. If not, try clicking on “refresh” on the main menu bar and observe the message at the bottom, right of the screen. If this says “offline” then the communication link has failed and you will need to recheck that everything is wired correctly and switched on etc. Also recheck all settings. If still not working refer to the fault finding section.

Finally set the logging frequency to be either every minute or every 5 minutes. The software creates one file for each monitor or controller for each month. Obviously a logging frequency of 1 minute will create much larger files than if set to 5 minutes.

7.5 Sensor Calibration

When calibrating it is a good idea to disable dosing first but remember to re-enable it when you have finished. To disable dosing

Calibrate pH

Connect the pH electrode to the plug connector on the front of the unit. Place the electrode in the pH 7 buffer solution and allow it to stand for a few minutes. (for a really accurate calibration allow at least 10 minutes).
Now press the mode button to get to the "calibrate" menu item. Press enter (the up arrow) briefly to enter the calibrate sub-menu. Now press the up or down arrows until the reading is exactly 7.00pH. Press save.
Rinse the electrode in water, then place in pH 4 buffer solution. Wait for a few minutes and then press the mode button to get to "calibrate" on the menu. Now briefly press enter (up arrow) to enter the submenu and **now press the Mode button again to get to cal pH 4**. Now, press the up and down buttons to get the reading to be exactly 4.00pH and press save.

Calibrate EC

Clean the face of the EC probe using a clean kitchen scourer such as a ScotchBrite, rinse in water and place in the EC standard solution. Allow a few minutes for the temperature compensation to take effect. Now move down to "calibrate", press enter and then press the mode key again to get to the CAL EC (CF) mode. Now press the up and/or down arrows to get the reading to be exactly the same as the value of the standard solution (usually 27.7 CF or 2.77 EC). Press save.
Note: For most accurate operation, use a standard solution which is as close as possible to your working value and always replace the standard solution at regular (3 monthly) intervals .

Remember to re-enable dosing when you have finished calibration.

Calibrate RH and Solar

If the RH and Solar information is derived from an Autovent controller then there is no need to calibrate the RH or Solar here and the calibrated value should always be set to be the same as the "raw" value being received from the Autovent.

If however, the RH and solar readings are obtained direct from an enviro sensor or weather station then the readings may be calibrated locally. This can be done on the controller by going into

SETUP\SETUP Peripherals\SETUP Peripherals\SETUP Calib ENV (or Calib WS)

Here you can see both the calibrated value and the raw value and you can change the calibrated value to correspond with any high grade meter available. If this reading is changed in the factory before dispatch the percentage difference will be recorded on the calibration sheet with the manual.

8. Maintenance

Every week:-
Insect the plant room and greenhouse and look for any signs of leaks or corrosion. Attend to leaks immediately, before significant damage occurs.
Take samples of the irrigation solution at the grow beds and test the EC and pH using an accurate hand held meter

Every four weeks:-
Thoroughly clean the EC probe.
Remove the EC probe, scour the face with a mild bathroom abrasive like Jif (NOT Lemon JIF as this contains oils) on an abrasive nylon pad (ScotchBrite) and then rinse in clean water. DO NOT TOUCH THE PROBE FACE as your perspiration may contain oil.

Check the calibration of the EC probe:
Shake off all excess water and place in the CF 27.7 (EC 2.77) standard solution. Allow to stand for a few minutes before calibrating then hold suspended in mid solution during the calibration. The up/down buttons may need to be pressed a number of times (or held down for a while to invoke auto-repeat) to make the displayed values change to the correct reading. Press *save* to store the new calibration.

Check the calibration of the pH electrode:
Remove the electrode and rinse in fresh water. Shake gently to displace excess water and place in pH 7 buffer solution. Stand for 10 minutes or longer. Select CAL pH7 mode. Now press the up/down buttons to get the display to read 7.00 and then press **save**. Rinse the electrode in fresh water, shake excess water off and place in pH 4 buffer. Stand for ten minutes or more and then select CAL pH4 mode. Now press the up/down buttons to get the display to read 4.00. Press **save.**
pH electrodes are only warranted for six months but should last for between six months and two years. You may wish to replace the electrode every year as part of a preventive maintenance program. Never let the tip dry out and when not in use stand in clean water which has a little pH4 buffer added. As pH electrodes age they tend to get slower and slower and also drift when in weak solutions (ie in the nutrient solution)
If the pH electrode is looking particularly dirty, you can try standing it in 20% acid for 10 minutes. This will sometimes rejuvenate an aging electrode

Check dosing system
Check that the dosing of A and B nutrient stock solutions is equal and, if necessary, adjust the A/B ratio to correct. If the dosing is very different it may be time to replace or service the pumps or valves.

Every year
Replace the rubber boot on the acid injector
Replace the pH electrode
Check all hoses and replace if they become stiff and discoloured

9. Faultfinding

Before looking for a fault, ensure all settings (both switches and keypad) are correct

No display : Check power supply is ON and also check fuse on side of cabinet. For the 220V-240V version a 1 Amp fuse is fitted; whereas a 2 Amp fuse is supplied for the 110V-120V model.
EC reading incorrect: Clean the EC probe then recalibrate
pH reading wandering and won't calibrate: pH electrode may need to be replaced, BNC connector may be damp. Water level in sample pot too low to cover tip of electrode, water not circulating through sample pot.
No PC communications – PC reports controller to be offline

- address at monitor different to address at PC or two units set with the same address
- cable between monitor and PC broken – try moving the monitor close to the PC to exclude the long cable
- Wires in cable between monitor and PC crossed
- Terminator missing from furthest monitor or terminator present on intermediate monitor. (Only one terminator should be in the system at the furthest monitor from the PC)
- No power to the PC interface unit
- Cable between PC and interface unit disconnected or in wrong COM port of PC
- PC configuration incorrect (IRQ clash or port not installed)
- Wrong COM port selected within CompuGrow software

Uploaded data cannot be viewed in the history screen

- Date and/or time on controller or PC incorrect

Upload of logged data does not stop.

- Reset controller. To do this, remove the power to the controller. Hold down both the ENTER and the EXIT buttons and switch on the power. Keep the buttons held in until the display comes up. Normally this will only need doing when the controller is first installed.

Warranty

The warranty on the controller, EC sensor and temperature sensor is limited to 2 years – return to factory. Before returning the unit for service you must call Autogrow Systems Ltd for a return authorization .
pH electrodes, RH sensors and fans carry only a 6 month warranty from their respective manufacturers.
This warranty specifically excludes any parts that have been broken or damaged by water, chemical attack or excessive temperature. I n particular, the controller and PC interface must be stored and used in a dry, shaded and well ventilated situation. At no time must the case temperature be allowed to exceed 60 deg C (140 deg F).

This warranty specifically excludes liability for consequential damages or for charges for labour or other expense in making repairs or adjustments, or loss of time or inconvenience.